Algebraic & Geometric Topology 16 (2016) 1637–1681

Exotic smoothings via large $\mathbb{R}^4$'s in Stein surfaces

JULIA BENNETT

We study the relationship between exotic $\mathbb{R}^4$'s and Stein surfaces as it applies to smoothing theory on more general open 4–manifolds. In particular, we construct the first known examples of large exotic $\mathbb{R}^4$'s that embed in Stein surfaces. This relies on an extension of Casson's embedding theorem for locating Casson handles in closed 4–manifolds. Under sufficiently nice conditions, we show that using these $\mathbb{R}^4$'s as end-summands produces uncountably many diffeomorphism types while maintaining independent control over the genus-rank function and the Taylor invariant.

57N13; 57R55

1 Introduction

There are relatively few techniques available for studying smoothing theory on open 4–manifolds. It was shown by Quinn [25] that every open 4–manifold admits at least one smooth structure. While there are many examples that actually admit uncountably many diffeomorphism classes of smooth structures, it is still unknown if this can be expected in general. In particular, it is still conceivable that some open 4–manifold is uniquely smoothable up to diffeomorphism. The goal of this paper is to extend existing technology for understanding exotic open 4–manifolds by exploring the relationship between exotic $\mathbb{R}^4$'s and Stein surfaces. We construct an uncountable family of exotic $\mathbb{R}^4$'s with previously unknown properties, and we exploit these to gain a new level of control over existing invariants of exotic smoothings on open 4–manifolds.

Historically, methods for finding infinite families of exotic open 4–manifolds relied heavily on information about the behavior of smoothings on $\mathbb{R}^4$. Gompf [14] defined the first infinite collection of exotic $\mathbb{R}^4$'s, smooth 4–manifolds that are homeomorphic but not diffeomorphic to $\mathbb{R}^4$. Uncountably many exotic $\mathbb{R}^4$'s were later produced by Taubes [27] by extending Donaldson theory and then applying the results in conjunction with Freedman's breakthroughs [8]. This was the first 4–manifold to exhibit such uncountable behavior. Related families of smooth structures were subsequently defined on more general open 4–manifolds by fixing some standard smooth structure and then attaching infinitely many different $\mathbb{R}^4$'s using an operation introduced by Gompf [13] called *end-summing*. Under sufficiently nice conditions, this resulted in infinitely many

Published: 1 July 2016 DOI: 10.2140/agt.2016.16.1637

diffeomorphism classes (sometimes countable and sometimes uncountable) on the same underlying 4–manifold. For example, see the work of Bižaca and Etnyre [2], Taylor's generalization [28], results from Gompf [15], and additional generalizations by Ding [5], Fang [7], and Gompf and Stipsicz [22, Section 9.3]. The hypotheses required for this procedure to succeed depended greatly on what was known about the $\mathbb{R}^4$'s being attached. In most cases, the resulting diffeomorphism types were distinguishable either by the *Taylor invariant* [28] (taking values in $\mathbb{Z}^{\geq 0} \cup \{\pm\infty\}$) or a generalization of *compact equivalence classes*, as in Gompf [14], which are two invariants that measure the complexity of embedded exotic $\mathbb{R}^4$'s in a given smooth 4–manifold. However, little information beyond these invariants was known about the exotic open 4–manifolds that were produced. Additionally, it seems likely that the methods for detecting exoticness were too coarse. At this stage, however, it was not clear what additional structure could be expected from exotic $\mathbb{R}^4$'s that would be helpful for obtaining a better understanding of this construction.

More recently, Gompf exploited the rich structure associated to *Stein surfaces* to study open 4–manifolds [19]. A Stein surface is an open complex 4–manifold that admits a proper biholomorphic embedding into some ambient $\mathbb{C}^N$. These have associated *adjunction inequalities* that place restrictions on an invariant called the *genus-rank function*. This invariant was introduced by Gompf [19], measuring the genera of smoothly embedded homologically essential surfaces in a given smooth 4–manifold. In the same article, exotic smooth structures on many handlebody interiors were defined by replacing standard 2–handles with *Casson handles*. After embedding into Stein surfaces and applying the associated adjunction inequalities, the resulting diffeomorphism types were distinguished by their genus-rank functions. Despite the significant advancements in the study of exotic 4–manifolds that have been facilitated by Stein surfaces, these techniques had not previously been considered in the case of open 4–manifolds. These developments from Gompf [19] demonstrated the importance of Stein surfaces to our current setting.

This paper constructs exotic $\mathbb{R}^4$'s while maintaining control over their relationship with Stein surfaces. Our primary interest will be in *large* $\mathbb{R}^4$'s, ie those that contain smooth compact codimension-0 submanifolds that do not embed in the standard $\mathbb{R}^4$. For context, we note that both the Taylor invariant and compact equivalence class measure the size of $\mathbb{R}^4$'s. In particular, all $\mathbb{R}^4$'s with either nonzero Taylor invariant or a different compact equivalence class than the standard $\mathbb{R}^4$ are large. There are various constructions of large $\mathbb{R}^4$'s appearing in the literature. For example, Gompf [14] defines infinitely many large $\mathbb{R}^4$'s using topologically slice links and later [14; 15] constructs doubly indexed uncountable families of large $\mathbb{R}^4$'s by analyzing compact equivalence classes, Bižaca and Etnyre [2] and Taylor [28] find $\mathbb{R}^4$'s with arbitrarily large values

of the Taylor invariant and sometimes uncountably many compact equivalence classes, and Freedman and Taylor [11] produce a *universal* $\mathbb{R}^4$ containing all other $\mathbb{R}^4$'s as end-summands. However, the connection between large $\mathbb{R}^4$'s and Stein surface has never before been investigated. There do exist exotic $\mathbb{R}^4$'s that are contained in Stein surfaces, but all previously known examples are necessarily small. (Most small $\mathbb{R}^4$'s actually embed in $\mathbb{C}^2$, and Gompf [16; 20] produces small $\mathbb{R}^4$'s that admit Stein structures.)

We define the first collection of large $\mathbb{R}^4$'s that each come equipped with an embedding into a Stein surface, chosen so that they still carry the information necessary for manipulating both the Taylor invariant and compact equivalence classes.

Theorem 1.1 *There exist uncountably many large $\mathbb{R}^4$'s that each admit a smooth embedding into a Stein surface. Furthermore, these realize arbitrarily large (finite) values of the Taylor invariant by uncountably many compact equivalence classes.*

It turns out that the diffeomorphism type of each Stein surface only depends on the Taylor invariant of the corresponding $\mathbb{R}^4$. So we've produced an uncountable family of large $\mathbb{R}^4$'s inside a countable family of Stein surfaces. It follows from Taylor [28, Remark 4.5] that these $\mathbb{R}^4$'s fail to admit a handle decomposition without infinitely many 3–handles, while Stein surfaces always admit a handle decomposition with no 3– or 4–handles. In particular, these $\mathbb{R}^4$'s do not admit Stein structures themselves. This theorem is an immediate consequence of Theorem 3.4 and Corollary 3.5, which provide much more detail about the structure of these $\mathbb{R}^4$'s. Corollary 3.9 obtains a similar result in the case of infinite Taylor invariant.

These properties should not be expected generically from large $\mathbb{R}^4$'s. To emphasize this, we produce another family that behaves similarly on the level of the Taylor invariant but has a very different relationship with Stein surfaces.

Theorem 1.2 *There exist exotic $\mathbb{R}^4$'s that realize arbitrarily large (finite) values of the Taylor invariant and each contain a smooth compact codimension-0 submanifold that does not smoothly embed into any Stein surface.*

As we've stated it, this theorem is a slightly weakened version of Theorem 3.7. Its proof relies on Lemma 3.6, which provides an explicit description of compact handlebodies that fail to embed into any Stein surface (even when we allow the embedding to be trivial on the level of second homology).

We begin illustrating the usefulness of these new $\mathbb{R}^4$'s by analyzing the behavior of the genus-rank function under the end-sum operation. We observe that the adjunction inequality associated to Stein surfaces can be preserved while end-summing with certain large $\mathbb{R}^4$'s, even though they do not admit Stein structures themselves.

Theorem 1.3 *If a smooth 4–manifold is obtained by end-summing some Stein surface with an $\mathbb{R}^4$ defined by Theorem 1.1, then it still satisfies the adjunction inequality associated to this Stein surface.*

Much stronger versions of this theorem can be found in Lemma 4.2 and Corollary 4.3. Conversely, end-summing with the large $\mathbb{R}^4$'s produced by Theorem 1.2 can significantly influence the genus-rank function. As seen in Example 4.4, this operation easily modifies Stein surfaces so that they no longer satisfy the adjunction inequality.

Armed with this result, we systematically study the way end-summing with large $\mathbb{R}^4$'s affects the Taylor invariant, compact equivalence classes, and the genus-rank function. In the best case, we find that all three invariants can be controlled independently. To start, we restrict our attention to two invariants.

Theorem 1.4 *Suppose that X is an open topological 4–manifold that is the interior of an oriented spin handlebody with all indices at most 2 and with $0 < \beta_2(X) < \infty$. There are smooth structures on X that realize infinitely many values of Taylor invariant but all produce the same genus-rank function, and infinitely many genus-rank functions occur in this way. Similarly, there are smooth structures on X that produce infinitely many genus-rank functions but all realize the same arbitrarily large (finite) value of the Taylor invariant.*

After adding a technical requirement, we establish control over the missing invariant.

Addendum 1.5 *If the standard smooth structure that X inherits as a handlebody interior is compactly positive-definite, then each pair of Taylor invariant and genus-rank function from this theorem is realized by smooth structures on X representing uncountably many compact equivalence classes.*

We also provide similar theorems for each pair of invariants under various relaxed hypotheses. Additionally, we can sometimes exploit other nice properties of these $\mathbb{R}^4$'s to realize each triple that occurs in these results by an uncountable family. Precise statements of these different cases and many examples can be found in the second half of Section 3.

The two contrasting families of $\mathbb{R}^4$'s produced in this paper rely on very different constructions. The definition of the first family requires a careful study of Casson handles, which is used to sharpen a standard cut-and-paste argument for constructing large $\mathbb{R}^4$'s. More specifically, we introduce a new procedure for locating Casson handles in closed 4–manifolds. While such a procedure already existed in various

forms (see, for example, Casson's embedding theorem [4], Quinn's handle straightening theorem [25], and Gompf's exposition [17, Section 5]), our method is the first to provide control over the topology of the Casson handles that are produced. After fixing our initial setup, we give a complete characterization of when a single Casson handle can be found without losing this extra control. We also investigate when multiple Casson handles can be located simultaneously. Our answer turns out to be a substantial extension of previous results. It is obtained by modifying Casson's original embedding theorem [4] using the Arf invariant associated to characteristic surfaces, which is defined by Freedman and Kirby [9]. This can all be found in Section 2. The second family is constructed by exhausting the universal $\mathbb{R}^4$ defined by Freedman and Taylor [11] by smaller $\mathbb{R}^4$'s. After finding compact handlebodies that do not embed into any Stein surface, the existence of the necessary compact submanifolds follows from a technique used by Gompf [14] for embedding compact handlebodies into $\mathbb{R}^4$'s.

Organization Section 2 provides a careful introduction to Casson handles, describes the procedure for locating Casson handles in closed 4–manifolds, and investigates various applications of this procedure. In Section 3, we define the two families of $\mathbb{R}^4$'s described above and study the implications of their different relationships to Stein surfaces. Finally, Section 4 analyzes the effects of end-summing with these two families.

Conventions All handlebodies are assumed to be *self-indexing* and locally finite, which means they can be constructed in a locally finite way by simultaneously attaching all handles of a given index to the collection of handles that have strictly smaller index. Every open 4–manifold is the interior of a handlebody meeting this description, and it follows from Gompf [18, Appendix] that these requirements do not increase the highest index handle required to describe a given open 4–manifold as a handlebody interior. This paper will refer to 4–dimensional Stein domains, the compact analogue to open Stein surfaces, as compact Stein surfaces. We direct the reader to [22, Section 11] for more information about Stein surfaces, and also for the minimal amount of background pertaining to contact structures that is required for this paper. As a convention, we will not assume that embeddings are orientation-preserving unless explicitly stated. However, all immersion are assumed to be generic and all homotopies are assumed to be regular. The notation X_Σ will be used to denote a smooth 4–manifold that is obtained by equipping some topological 4–manifold X with a smooth structure Σ. We will leave out the subscript when the smooth structure is clear from context, as is the case for most of Section 2 and Section 3.

Acknowledgements The author would like to thank her advisor, Robert Gompf, for his thoughtful guidance and many insightful suggestions. Much of this work was completed while being supported by NSF Grant DMS-1148490.

2 The first stage of embedded Casson handles

The goal of this section is to introduce a procedure for constructing Casson handles in closed 4–manifolds, designed to provide some control over the topology of the Casson handles that are produced.

We begin with a discussion about kinky handles. Recall that a *kinky handle* is obtained by performing self-plumbings on the standard 2–handle. Suppose that k is a kinky handle and D is the immersed disk produced by the plumbing operation. The diffeomorphism type of k is uniquely determined by the signs associated to the double points of D. To attach k to a framed circle, we first attach the standard 2–handle to this circle using the framing that is obtained by adding $-2\,\mathrm{Self}(D)$ signed twists to the given framing. Then we perform the necessary self-plumbings, so that k now attaches to this circle in such a way that D pushes off along the given framing to a disk whose algebraic intersection with D vanishes.

It will be helpful to also have an alternate description of kinky handles. Observe that $B^4 = D^2 \times D^2$ is a regular neighborhood of the disk $D^2 \times 0$ and also of its union with any collection of parallel disks $p_1 \times D^2, \dots, p_g \times D^2$ for points $p_1, \dots, p_g \in \mathrm{int}(D^2)$. After equipping each disk with an orientation, this union is bounded by the oriented link shown in the first diagram in Figure 1. Attaching 1–handles to B^4 as shown in the second diagram in Figure 1 produces a 4–manifold that is a regular neighborhood of a smoothly immersed disk D, obtained by ambiently boundary summing $D^2 \times 0$ with each of these parallel disks using the 2–dimensional 1–handles shown in red. The original choice of orientations defines an orientation on D, so we can arrange for the signed double points of D to realize any desired configuration by choosing the correct number of parallel disks and orienting them appropriately. Observe that ∂D is the circle in $\partial(B^4 \cup (1\text{–handles}))$ shown in the final diagram in Figure 1. Thus, every kinky handle is diffeomorphic to $B^4 \cup (1\text{–handles})$ and its attaching region is a regular neighborhood of ∂D in $\partial(B^4 \cup (1\text{–handles}))$, provided we arrange for D to have the appropriate signed double points. The 0–framing on ∂D from Figure 1 will be called the 0–framing on this attaching region. From this perspective, attaching a kinky handle to a framed knot is equivalent to attaching $B^4 \cup (1\text{–handles})$ along this attaching region by identifying its 0–framing with the framing given on this knot. Using Casson's terminology, we will say that the *frontier* of a kinky handle is the subset of its boundary obtained by removing its attaching region.

This abstract description of kinky handles is useful when constructing Casson handles. In particular, we can define a set of framed circles on the frontier of any kinky handle k by first fixing an identification with the final diagram in Figure 1 (preserving attaching regions) and then choosing a 0–framed meridian of each dotted circle in this diagram.

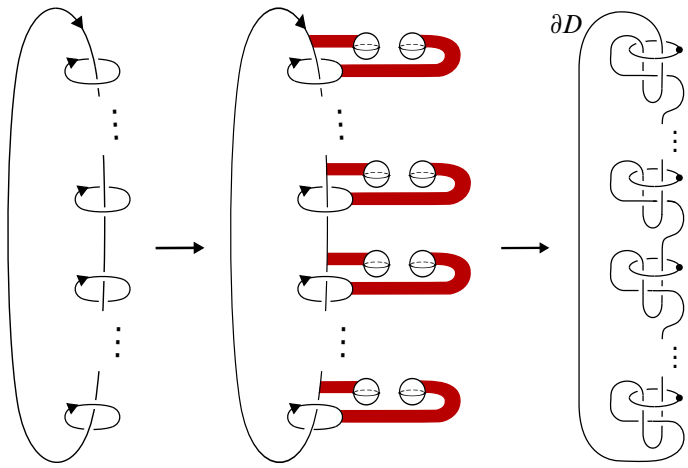

Figure 1: An alternate description of kinky handles

We say that any set of framed circles obtained in this way is a *collapsing set* for k. Attaching standard 2–handles to k along any collapsing set recovers the standard 2–handle with its standard 0–framing. To avoid special cases, we will treat the standard 2–handle as a kinky handle with an empty collapsing set.

We provide a brief description of Casson handles, but encourage the reader to see [8, Section 2], [19, Section 2], or [23, Chapter 7] for alternate descriptions and more detailed exposition. To construct a Casson handle, we start with a 1–*stage tower* (T_1, ∂_-) consisting of a single kinky handle and its attaching region. Then we construct a 2–*stage tower* T_2 by attaching kinky handles to T_1 along a collapsing set for T_1. Next, we produce a 3–stage tower T_3 by attaching kinky handles along collapsing sets for each kinky handle attached in the previous step. Iterating this procedure defines an n–*stage tower* T_n for every $n \in \mathbb{Z}^{>0}$. Thus, we obtain a nested sequence $T_1 \subseteq T_2 \subseteq T_3 \subseteq \cdots$. A *Casson handle* CH is obtained by taking the infinite union $\bigcup_{i=1}^{\infty} T_i$ of any nested towers that are constructed in this manner and then removing all boundary except the interior of ∂_-. We refer to the immersed disk D corresponding to T_1 as the *first-stage disk* of CH. The remaining boundary of CH is the attaching region of CH and it comes equipped with a 0–framing corresponding to the 0–framing on ∂_-. We can attach CH to a framed circle by identifying this 0–framing with the given framing on the circle. The fundamental result of Freedman from [8] states that every Casson handle is homeomorphic to the standard open 2–handle by a homeomorphism that preserves attaching regions. So attaching Casson handles to a collection of 0– and 1–handles and then removing the remaining boundary produces a smooth open 4–manifold that is homeomorphic (but possibly not diffeomorphic) to the result of replacing each of these Casson handles with the standard open 2–handle. Following

[19], any smooth structure constructed in this way will be called a *Casson smoothing*. If the resulting smooth 4–manifold admits a Stein structure, then it is also referred to as a *Stein–Casson smoothing*. A very useful property of Casson handles is that every Casson handle embeds into the standard 2–handle by a smooth orientation-preserving embedding that preserves attaching regions.

We turn our attention to locating Casson handles in closed 4–manifolds. We would like to realize some preassigned configuration of double points in the first-stage disks of the Casson handles we produce. We start with a smoothly immersed sphere S in a closed 4–manifold X. Observe that a regular neighborhood of S in X can be identified with a smoothly embedded copy of $B^4 \cup T_1$ for some 1–stage tower T_1 attaching to an $(S \cdot S)$–framed unknot in ∂B^4, with the diffeomorphism type of T_1 uniquely determined by the signs associated to the double points of S. If there are smoothly embedded disjoint Casson handles in X that ambiently attach to $B^4 \cup T_1$ along a collapsing set on the frontier of T_1, then the interior of $B^4 \cup T_1$ together with these new Casson handles is the interior of a smoothly embedded copy of $B^4 \cup \mathrm{CH}$ for some Casson handle CH whose first stage is T_1. We call the Casson handles attaching to T_1 *second-stage Casson handles* because they are attaching to a 1–stage tower. So CH is obtained from T_1 by attaching these second-stage Casson handles and then removing all remaining boundary except the interior of the attaching region of T_1. This construction ensures that S is the union of the first-stage disk of CH and a smoothly embedded unknotted disk in B^4. Thus, the configuration of double points in S dictates the double points in the first-stage disk of the resulting Casson handle CH. So we have reduced our task to determining conditions on smoothly immersed spheres that guarantee the existence of these second-stage Casson handles. Once completed, locating a smoothly immersed sphere satisfying this criterion and realizing some desired configuration of double points is equivalent to locating a Casson handle with that configuration of double points in its first-stage disk. We will later consider this setup for multiple immersed spheres in order to construct multiple Casson handles at once.

Under sufficiently nice conditions, the proof of Casson's embedding theorem [4] provides a procedure for finding second-stage Casson handles. We state this theorem below using the terminology we have introduced.

Casson's embedding theorem *Suppose that $D_1, \dots, D_n$ are smoothly immersed disks in a smooth simply connected 4–manifold Y, with $\partial D_1, \dots, \partial D_n$ disjointly embedded in ∂Y. If $D_i \cdot D_j = 0$ for each $i \neq j$ and there are homology classes $\beta_1, \dots, \beta_n \in H_2(Y)$ such that each $D_i \cdot \beta_j = \delta_{ij}$ and each $\beta_j \cdot \beta_j$ is even, then $D_1 \cup \cdots \cup D_n$ can be smoothly homotoped rel ∂ so that $D_1, \dots, D_n$ are the first-stage disks of smoothly embedded disjoint Casson handles $\mathrm{CH}_1, \dots, \mathrm{CH}_n$ in Y.*

Our primary application will only consider a single immersed disk, obtained from an immersed sphere by removing the interior of a small B^4 neighborhood around one of its points. However, the homotopy of $D_1 \cup \cdots \cup D_n$ is not desirable because we lose control over the double points of each D_i. If $D_1, \dots, D_n$ are initially disjoint and $Y - (D_1 \cup \cdots \cup D_n)$ is simply connected, then it follows from the proof of this theorem that the same result holds without needing to first perform a homotopy. When Y admits a spin structure, the proof also ensures that these additional hypotheses can actually replace the requirement that $\beta_1, \dots, \beta_n$ exist and we again obtain this result without needing to perform a homotopy. In either of these two cases, the Casson handles are constructed by the method described in the previous paragraph, ie by identifying a regular neighborhood of $D_1 \cup \cdots \cup D_n$ with disjoint 1–stage towers and then locating disjoint second-stage Casson handles in Y that are ambiently attaching to this neighborhood along collapsing sets for each 1–stage tower. A key step in the construction of these second-stage Casson handles is producing immersed disks in $Y - (D_1 \cup \cdots \cup D_n)$ that are bounded by these collapsing sets and each push-off by the given framing to realize an even self-intersection number. Once these disks have been located, the existence of the second-stage Casson handles only relies on the requirement that $Y - (D_1 \cup \cdots \cup D_n)$ is simply connected. Unfortunately, this proof fails to produce these disks outside of the two situations we have described. In particular, this step cannot be completed when $Y - (D_1 \cup \cdots \cup D_n)$ is spin but Y is not spin. This situation occurs, for example, if some D_i is Poincaré dual to $w_2(Y) \in H^2(Y, \mathbb{Z}_2)$.

By using tools provided by Freedman and Kirby [9] to choose appropriate collapsing sets, we will sometimes be able to locate these disks used in the construction of second-stage Casson handles even when the conditions necessary for the proof of Casson's embedding theorem are not satisfied. The results from [9] associate a quadratic form $\widetilde{q}\colon H_1(F, \mathbb{Z}_2) \to \mathbb{Z}_2$ to any smoothly embedded orientable surface F in a smooth oriented closed 4–manifold X, provided that F represents the Poincaré dual to $w_2(X) \in H^2(X, \mathbb{Z}_2)$. This quadratic form has the property that if B is a smoothly immersed surface in X bounded by a circle $a \in H_1(F, \mathbb{Z}_2)$ with the interior of B disjoint from F, then $\widetilde{q}(a)$ equals the modulo 2 self-intersection number of B obtained by pushing B off along the normal framing induced by the embedding of a into F. [9, Theorem 1] ensures that the Arf invariant of $\widetilde{q}$ equals the modulo 2 reduction of $\frac{1}{8}(F \cdot F - \sigma(X))$. (A nice introduction to the Arf invariant is found in [26, Appendix].) Unlike [9], we are interested in immersed spheres rather than embedded surfaces.

Definition 2.1 Let S be a smoothly immersed sphere in a smooth oriented closed 4–manifold X. We say that (X, S) is a *characteristic pair* if S represents the Poincaré dual to $w_2(X) \in H^2(X, \mathbb{Z}_2)$. The *Arf invariant* of a characteristic pair (X, S), denoted $\mathrm{Arf}(X, S)$, is defined as the modulo 2 reduction of $\frac{1}{8}(S \cdot S - \sigma(X))$.

Notice that the Arf invariant of a characteristic pair (X, S) equals the Arf invariant of the bilinear form $\widetilde{q}$ associated to the surface F that is obtained by resolving each double point of S. It is precisely this relationship that will supply the disks needed in the construction of second-stage Casson handles when the proof of Casson's embedding theorem cannot be implemented.

Applying the methods we have introduced, we can now provide a criterion for determining if a smoothly immersed sphere in a closed 4–manifold decomposes as the union of a smoothly embedded disk and the first-stage disk of a smoothly embedded Casson handle.

Lemma 2.2 *Let S be a smoothly immersed sphere in a smooth oriented closed 4–manifold X with $X-S$ simply connected. Suppose that either (X, S) is a characteristic pair with $\mathrm{Arf}(X, S) = 0$, or (X, S) is not a characteristic pair. Then there is a Casson handle CH such that $B^4 \cup \mathrm{CH}$ admits a smooth orientation-preserving embedding into X with S equal to the union of the first-stage disk of CH and a smoothly embedded, unknotted disk in B^4, where CH is attaching to B^4 along an $(S \cdot S)$–framed unknot in ∂B^4. If instead (X, S) is a characteristic pair with $\mathrm{Arf}(X, S) \neq 0$, then there is no Casson handle with such an embedding.*

We note that the content of this lemma primarily comes from the characteristic cases, as the noncharacteristic case is essentially a corollary to the proof of Casson's embedding theorem.

Proof We begin with the case where (X, S) is not a characteristic pair, ie the modulo 2 reduction of $[S] \in H_2(X)$ is not dual to $w_2(X) \in H^2(X, \mathbb{Z}_2)$. The first step is to construct an element $\beta \in H_2(X)$ with $[S] \cdot \beta = 1$ and $\beta \cdot \beta$ even. Observe that $H_2(X; \mathbb{Z}_2) \cong H_2(X) \otimes \mathbb{Z}_2$ because the requirement that $X - S$ is simply connected forces X to also be simply connected. Since $w_2(X)$ is uniquely characterized by the property that its pairing with any $a \in H_2(X, \mathbb{Z}_2)$ equals the square of a under the standard $\mathbb{Z}_2$–pairing on $H_2(X, \mathbb{Z}_2)$, it follows that there is some $y \in H_2(X)$ with $[S] \cdot y + y \cdot y$ odd. The fact that $X - S$ is simply connected ensures the existence of a class $z \in H_2(X)$ with $[S] \cdot z = 1$. If $z \cdot z$ is even, let $\beta = z$. Otherwise, let $\beta = y + (1 - [S] \cdot y)z$. In either case, $[S] \cdot \beta = 1$ and $\beta \cdot \beta$ is even. Now choose a small B^4 neighborhood around a point in S. Observe that $D = S - \mathrm{int}(B^4)$ is a smoothy immersed disk in the smooth simply connected 4–manifold $Y = X - \mathrm{int}(B^4)$. Since D has a simply connected complement in Y and β is obviously carried in Y, our earlier discussion ensures that proof of Casson's embedding theorem now produces a smoothly embedded Casson handle CH in Y whose first-stage disk is D. Hence, we have located a smoothly embedded copy of $B^4 \cup \mathrm{CH}$ in X with S equal to the union

of the first-stage disk D of CH and a smoothly embedded unknotted disk in B^4. It is clear that CH is attaching to B^4 along an $(S \cdot S)$–framed unknot in ∂B^4.

Next, consider the case where (X, S) is a characteristic pair with $\mathrm{Arf}(X, S) \neq 0$. To obtain a contradiction, we suppose that there is a Casson handle CH and smoothly embedded copy of $B^4 \cup \mathrm{CH}$ in X meeting the necessary description. We can assume that $S \cdot S = 1$ by blowing up an appropriate number of times and ambiently connect summing S with a $\mathbb{C}P^1$ from each $\mathbb{C}P^2$ or $\overline{\mathbb{C}P}^2$ summand, ensuring that CH is attaching to B^4 along a 1–framed unknot in ∂B^4. Then the interior of $B^4 \cup \mathrm{CH}$ is homeomorphic to $\mathbb{C}P^2 - \{\mathrm{pt}\}$ and, consequently, X is homeomorphic to $\mathbb{C}P^2 \# Y$ for some Y with $\sigma(Y) = \sigma(X) - 1 = \sigma(X) - S \cdot S$. Using the assumption that (X, S) is a characteristic pair, notice that Y is even because $H_2(Y) = \langle [S] \rangle^{\perp} \subseteq H_2(X)$ and $[S] \cdot \alpha \equiv \alpha \cdot \alpha \pmod 2$ for every $\alpha \in H_2(X)$. Recall that the Kirby–Siebenmann invariant of a topological 4–manifold M, denoted $\mathrm{ks}(M)$, is an invariant taking values in $\mathbb{Z}_2$ that is additive under connected sum, vanishes if M admits a smooth structure, and equals the modulo 2 reduction of $\frac{1}{8}\sigma(M)$ if M is even. So $\mathrm{ks}(X) = \mathrm{ks}(\mathbb{C}P^2) + \mathrm{ks}(Y) = 0 + \mathrm{Arf}(X, S) \neq 0$. However, this is clearly a contradiction because X admits a smooth structure.

For the remainder of the proof, we suppose that (X, S) is a characteristic pair with $\mathrm{Arf}(X, S) = 0$. The first step is to identify $\mathcal{N}(S)$ with a smoothly embedded copy of $B^4 \cup T_1$ in X for some 1–stage tower T_1. Let $f = S \cdot S$ and let g denote the number of double points of S. Consider the Kirby diagram in Figure 2, where the 1–handle attaching spheres are identified in the usual way. Arrange for there to be exactly one $+1$–framed (resp. -1–framed) 2–handle for each negative (resp. positive) double point of S. Instead of passing to dotted circle notation, we make sense of the framing coefficients by assuming reference arcs have been specified so that the 0–framing on each 2–handle is given by its blackboard framing. Then we can fix an identification of $\mathcal{N}(S)$ with this Kirby diagram so that S is obtained by pushing a spanning disk for each red curve shown on the top in Figure 3 into the 0–handle, attaching the obvious $3g$ 2–dimensional 1–handles, and capping off by the core of the f–framed 2–handle and two (oppositely oriented) parallel copies of the core of each ± 1–framed 2–handle.

Notice that removing the f–framed 2–handle from $\mathcal{N}(S)$ produces a 1–stage tower T_1 whose attaching region agrees with the attaching region of the missing 2–handle. So there is a smooth orientation-preserving embedding of $B^4 \cup T_1$ into X with $\mathcal{N}(S) = B^4 \cup T_1$ that is defined by sending B^4 to this f–framed 2–handle and sending T_1 to the union of the remaining handles. (Choosing our embedding in this way will make it easier to work with circles on the frontier of T_1.) Observe that T_1 must be attached to B^4 along an f–framed unknot. Also note that S is the union of a

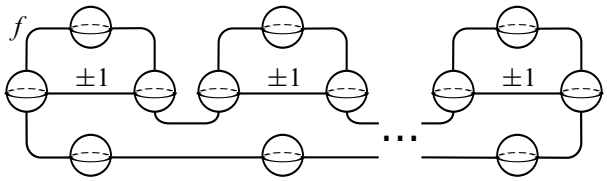

Figure 2: A regular neighborhood of an immersed sphere

smoothly embedded unknotted disk in B^4 and the smoothly immersed disk associated to T_1.

We locate the smoothly embedded orientable surface F obtained by resolving the double points of S then fixing a collapsing set for T_1. We claim that F can be seen in the Kirby diagram for $\mathcal{N}(S)$ by pushing a spanning disk for the red curve shown on the bottom in Figure 3 into the 0–handle, attaching the obvious $2g$ 2–dimensional 1–handles, and capping off by the core of the f–framed 2–handle. This follows because S is obtained from the surface meeting this description by cutting out the grey annuli shown on the bottom in Figure 3 (pushed into the interior of the 4–manifold to sit on the surface) and then using each ± 1–framed 2–handle to replace it with the standard model for a transverse double point of the appropriate sign. Notice that every circle on F comes with a standard framing induced by its normal framing in F. It follows from our description of F that there are circles $x_1, y_1, \dots, x_g, y_g$ on F that represent a symplectic basis for $H_1(F)$ and push-off to the circles $\widetilde{x}_1, \widetilde{y}_1, \dots, \widetilde{x}_g, \widetilde{y}_g$ shown on the top in Figure 4, sending this standard framing on $x_1, y_1, \dots, x_g, y_g$ to the blackboard framing on $\widetilde{x}_1, \widetilde{y}_1, \dots, \widetilde{x}_g, \widetilde{y}_g$. The circles $\widetilde{y}_1, \dots, \widetilde{y}_g$ equipped with their blackboard framings form a collapsing set on the frontier of T_1.

Before proceeding, we study the quadratic form from [9] associated to the embedding of F into X. Since F represents the dual to $w_2(X) \in H^2(X, \mathbb{Z}_2)$, this quadratic form $\widetilde{q}\colon H_1(F, \mathbb{Z}_2) \to \mathbb{Z}_2$ is indeed well-defined. For each $i = 1, \dots, g$, let a_i and b_i denote the elements of $H_1(F, \mathbb{Z}_2)$ represented by x_i and y_i respectively. Then $a_1, b_1, \dots, a_g, b_g$ is a basis for $H_1(F, \mathbb{Z}_2)$ with each $a_i \cdot b_j = \delta_{ij}$ under the standard pairing on $H_1(F, \mathbb{Z}_2)$. The description in the previous paragraph ensures that $\mathcal{N}(F)$ is obtained from $\mathcal{N}(S)$ by removing the ± 1–framed 2–handles from the Kirby diagram in Figure 2. So each $\widetilde{x}_i$ lies on $\partial\mathcal{N}(F) \cap \partial\mathcal{N}(S)$ and can be isotoped on $\partial\mathcal{N}(F)$ to the attaching circle of one of these ± 1–framed 2–handles, with the blackboard framing on $\widetilde{x}_i$ mapping to the 0–framing on this attaching circle. Thus, each $\widetilde{x}_i$ bounds a smoothly embedded disk in $X - F$ that realizes an odd self-intersection number using the blackboard framing on $\widetilde{x}_i$. Calling on the introduction of $\widetilde{q}$ given earlier, this allows us to conclude that each $\widetilde{q}(a_i) = 1$ because the standard framing on x_i pushes-off to the blackboard framing on $\widetilde{x}_i$. (Alternatively, this can be seen using the methods of

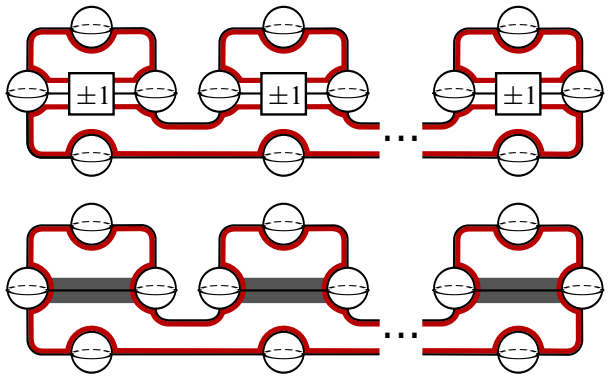

Figure 3: Resolving an immersed sphere to an embedded surface

[22, Section 8.2].) Consequently, it follows from [26, Appendix] that $\mathrm{Arf}(\widetilde{q})$ can be computed simply by counting the number of b_i with $\widetilde{q}(b_i) = 1$ and then reducing the result modulo 2. On the other hand, [9, Theorem 1] discussed earlier guarantees that $\mathrm{Arf}(\widetilde{q}) = \mathrm{Arf}(X, S) = 0$. This means that the number of b_i with $\widetilde{q}(b_i) = 1$ is even. Without loss of generality, we can therefore assume that $\widetilde{q}(b_i) = 1$ for $i = 1, \dots, 2k$ and $\widetilde{q}(b_i) = 0$ for $i = 2k+1, \dots, g$. (Technically, this assumption changes the way that we initially identify $\mathcal{N}(S)$ with the Kirby diagram in Figure 2.)

Our next task is to replace the collapsing set found above with one that can be obtained by pushing-off circles on F whose image under $\widetilde{q}$ vanishes. Consider the k disjoint circles $C_1, C_3, \dots, C_{2k-1}$ with each C_i as shown on the bottom in Figure 4. Each C_i can be pushed into the interior of $\mathcal{N}(S)$ to lie on $S \cap F$, so that there is a self-diffeomorphism $\varphi\colon S \to S$ obtained by Dehn twisting on each resulting circle. This extends to a self-diffeomorphism $\varphi\colon \mathcal{N}(S) \to \mathcal{N}(S)$ with $\varphi(F) = F$. For each $i = 1, \dots, g$, let $y_i' = \varphi(y_i) \subseteq F$ and let $b_i' \in H_1(F, \mathbb{Z}_2)$ be the homology class it represents. The circles $\widetilde{y}_1, \dots, \widetilde{y}_g$ with their blackboard framings map under φ to framed push-offs $\widetilde{y}_1', \dots, \widetilde{y}_g'$ of the circles $y_1', \dots, y_g'$ on F with their standard framing. In particular, the framed circles $\widetilde{y}_1', \dots, \widetilde{y}_g'$ also form a collapsing set on the frontier of T_1 because φ maps $T_1 \subseteq \mathcal{N}(S)$ to itself while keeping its attaching region fixed. Observe that each $b_i' = b_i + a_i + a_{i+1}$ for odd $i = 1, \dots, 2k-1$, each $b_i' = b_i + a_{i-1} + a_i$ for even $i = 2, \dots, 2k$, and each $b_i' = b_i$ for $i = 2k+1, \dots, g$. By applying the fact that $\widetilde{q}$ is a quadratic form, it is now easy to verify that indeed $\widetilde{q}(b_i') = 0$ for each $i = 1, \dots, g$.

Finally, we find the necessary Casson handle. Since $X - S$ is simply connected, there are smoothly immersed disks in $X - \mathrm{int}(\mathcal{N}(S))$ bounded by $\widetilde{y}_1', \dots, \widetilde{y}_g'$. Recall that each $\widetilde{q}(b_i') = 0$ and each $\widetilde{y}_i'$ is a framed push-off of y_i' with its standard framing. Hence, the introduction of $\widetilde{q}$ given above allows us to conclude that each of these disks pushes off along the framing on $\widetilde{y}_i'$ to realize an even self-intersection number. As described

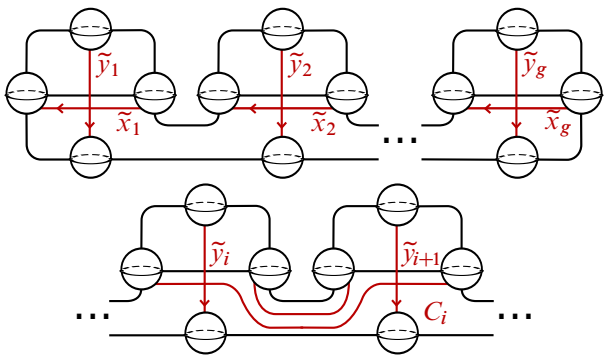

Figure 4: Modifying the push-off of a symplectic basis for $H_1(F)$

earlier, the final step in proof of Casson's embedding theorem can now be completed to construct smoothly embedded disjoint second-stage Casson handles $\mathrm{CH}_1, \dots, \mathrm{CH}_g$ in X ambiently attaching to $\mathcal{N}(S)$ along $\widetilde{y}_1', \dots, \widetilde{y}_g'$ using their framings. So there is a smoothly embedded Casson handle CH in X obtained from T_1 by attaching $\mathrm{CH}_1, \dots, \mathrm{CH}_g$ and then removing all boundary except the interior of the attaching region of T_1. Therefore, we have located a smoothly embedded copy of $B^4 \cup \mathrm{CH}$ with CH attaching to an f–framed unknot in B^4. Since the first-stage disk of CH is the immersed disk corresponding to T_1, we can conclude that S is equal to the union of the first-stage disk of CH and a smoothly embedded unknotted disk in B^4. □

We provide an example of the characteristic case with vanishing Arf invariant, although its usefulness will not be clear until the next section. Generalizing this example will be the first step in the proof of Theorem 3.4.

Example 2.3 Let $X = \overline{\mathbb{C}P}^2 \#48\, \mathbb{C}P^2$, let $e_0, e_1, \dots, e_{48}$ be the standard basis for $H_2(X)$, and let $\alpha = 7e_0 + e_1 + \cdots + e_{48} \in H_2(X)$. It is easy to construct a smoothly immersed sphere S representing α in X that has only negative double points and has a simply connected complement. Notice that (X, S) is a characteristic pair with $\mathrm{Arf}(X, S) = 0$. So Lemma 2.2 provides a smoothly embedded copy of $B^4 \cup \mathrm{CH}$ in X for some Casson handle CH with only negative double points in its first-stage disk, attaching to B^4 along a -1–framed unknot in ∂B^4. Furthermore, the topological sphere generating the second homology of $B^4 \cup \mathrm{CH}$ represents the characteristic element $\alpha \in H_2(X)$.

Though we will not need more generality for our applications, we observe that this lemma can also be extended to a collection of smoothly immersed spheres to produce multiple Casson handles simultaneously. Recall that any configuration of smoothly immersed spheres in a smooth oriented 4–manifold has an associated graph with signed

edges and weighted vertices. Conversely, every such graph corresponds to a handle decomposition for a regular neighborhood of any matching configuration of spheres. A sphere in one of these configurations has a double point if and only if there is a loop at the vertex corresponding to this sphere in the matching graph. (Further discussion about these relationships can be found in [22, Section 6.1].) The following corollary compiles conditions to ensure that a given configuration of smoothly immersed spheres can be capped off by second-stage Casson handles, as we did for a single sphere in the previous lemma.

Corollary 2.4 *Let $S_1, \dots, S_n$ be smoothly immersed spheres in a smooth oriented closed 4–manifold X with $X - (S_1 \cup \dots \cup S_n)$ simply connected. Define G to be the graph obtained by removing all loops from the graph corresponding to this configuration of spheres. Suppose that either some (X, S_i) is a characteristic pair with $\mathrm{Arf}(X, S_i) = 0$ or ambiently connect summing together any subset of $S_1, \dots, S_n$ never results in a smoothly immersed sphere that forms a characteristic pair with X. Then there are Casson handles $\mathrm{CH}_1, \dots, \mathrm{CH}_n$ such that $B^4 \cup (1\text{–handles}) \cup \mathrm{CH}_1 \cup \dots \cup \mathrm{CH}_n$ admits a smooth orientation-preserving embedding into X with each S_i equal to the union of the first-stage disk in CH_i and a smoothly embedded disk in $B^4 \cup (1\text{–handles})$, where $\mathrm{CH}_1, \dots, \mathrm{CH}_n$ are attaching to $B^4 \cup (1\text{–handles})$ in place of 2–handles in the standard handle decomposition corresponding to G.*

Proof We start by reducing to a more familiar setting. It is clear that $\mathcal{N}(S_1 \cup \dots \cup S_n)$ can be identified with a smoothly embedded copy of $B^4 \cup (1\text{–handles}) \cup T_1^{(1)} \cup \dots \cup T_1^{(n)}$, where $T_1^{(1)}, \dots, T_1^{(n)}$ are 1–stage towers attaching in place of 2–handles in the standard handle decomposition corresponding to G. For each $i = 1, \dots, n$, let D_i be the smoothly immersed disk in X associated to $T_1^{(i)}$. Also, let $N = B^4 \cup (1\text{–handles}) \subseteq X$. Then each S_i is the union of D_i and a smoothly embedded disk in N. Also, each $T_1^{(i)}$ has a collapsing set on its frontier. Let $\tilde{y}_1, \dots, \tilde{y}_g$ be the framed circles on $\partial\mathcal{N}(S_1 \cup \dots \cup S_n)$ that form the union of these collapsing sets. So ambiently attaching smoothly embedded disjoint second-stage Casson handles in $X - \mathrm{int}(\mathcal{N}(S_1 \cup \dots \cup S_n))$ to $\mathcal{N}(S_1 \cup \dots \cup S_n)$ along $\tilde{y}_1, \dots, \tilde{y}_g$ produces the necessary Casson handles $\mathrm{CH}_1, \dots, \mathrm{CH}_n$, where each CH_i is obtained from $T_1^{(i)}$ by attaching the second-stage Casson handles to its frontier and then removing all remaining boundary except the interior of the attaching region for $T_1^{(i)}$. Hence, it suffices to locate these second-stage Casson handles.

Suppose first that some (X, S_i) is a characteristic pair with $\mathrm{Arf}(X, S_i) = 0$. After reordering, we assume that (X, S_1) is this characteristic pair. Again after reordering, we also assume that there is a positive integer m with $\tilde{y}_1, \dots, \tilde{y}_m$ contained in $\partial\mathcal{N}(S_1)$ and $\tilde{y}_{m+1}, \dots, \tilde{y}_g$ disjoint from $\partial\mathcal{N}(S_1)$. Since $X - (S_1 \cup \dots \cup S_n)$ is simply connected,

there are smoothly immersed disks in $X-\mathrm{int}(\mathcal{N}(S_1\cup\cdots\cup S_n))$ bounded by $\widetilde{y}_1,\dots,\widetilde{y}_g$. Our discussion about Casson's embedding theorem ensures these second-stage Casson handles exist if each disk can be chosen so that it pushes off along the given framing to realize an even self-intersection number. We apply the proof of Lemma 2.2 to (X,S_1) to modify the circles $\widetilde{y}_1,\dots,\widetilde{y}_m$ so that they still form a collapsing set for $T_1^{(1)}$ but now each disk that is bounded by one of $\widetilde{y}_1,\dots,\widetilde{y}_m$ must push-off as needed. Since S_1 is characteristic, $X-\mathrm{int}(\mathcal{N}(S_1))$ admits a spin structure. So $D_2,\dots,D_n$ are smoothly immersed, disjoint disks whose union has a simply connected complement in the smooth spin simply connected 4–manifold $X-\mathrm{int}(N\cup\mathcal{N}(S_1))$. As discussed above, the proof of Casson's embedding theorem allows us to assume that $\widetilde{y}_{m+1},\dots,\widetilde{y}_g$ have been chosen so that each $\widetilde{y}_j$ in this collection bounds a disk that pushes off as needed. Thus, we can conclude that these second-stage Casson handles exist.

Next, suppose that ambiently connect summing together any subset of $S_1,\dots,S_n$ never results in a smoothly immersed sphere that forms a characteristic pair with X. Let $\alpha_i=[S_i]\in H_2(X)$ for each $i=1,\dots,n$. Since $X-(S_1\cup\cdots\cup S_n)$ is simply connected, there exists $z_1,\dots,z_n\in H_2(X)$ with each $\alpha_i\cdot z_j=\delta_{ij}$. Let $\alpha\in H_2(X)$ be obtained by summing all α_i for which $z_i\cdot z_i$ is odd. Notice that α is represented by a smoothly immersed sphere obtained by ambiently connect summing some combination of $S_1,\dots,S_n$. As in the first paragraph of the proof of Lemma 2.2, our hypothesis ensures that there exists some $y\in H_2(X)$ with $\alpha\cdot y+y\cdot y$ odd. If $z_i\cdot z_i$ is even, let $\beta_i=z_i$. Otherwise, let $\beta_i=y+z_i-\sum_{j=1}^n(\alpha_j\cdot y)z_j$. It is now easy to verify that each $\alpha_i\cdot\beta_j=\delta_{ij}$ and each $\beta_j\cdot\beta_j$ is even. Notice that every homology class in $H_2(X)$ is carried in $X-N$. In particular, each β_j is the image of a homology class $\beta_j'\in H_2(X-N)$ under the map induced by inclusion $X-N\hookrightarrow X$. So the smoothly immersed, disjoint disks $D_1,\dots,D_n$ have a simply connected complement in the smooth simply connected 4–manifold $Y=X-\mathrm{int}(N)$ and there are homology classes $\beta_1',\dots,\beta_n'\in H_2(Y)$ with each $D_i\cdot\beta_j'=\delta_{ij}$ and each $\beta_j'\cdot\beta_j'$ even. As discussed above, the proof of Casson's embedding theorem now ensures that the necessary second-stage Casson handles exist after possibly modifying the collection $\widetilde{y}_1,\dots,\widetilde{y}_g$. □

As an example of how this corollary can be applied, we look at spheres generating the homology of nuclei in elliptic surfaces.

Example 2.5 Fix an even, positive integer n and let $N(n)$ denote the nucleus in the elliptic surface $E(n)$. Recall that $H_2(N(n))=\mathbb{Z}\oplus\mathbb{Z}$, generated by $\alpha_1,\alpha_2\in H_2(N(n))$ satisfying $\alpha_1^2=0,\alpha_2^2=-n$, and $\alpha_1\cdot\alpha_2=1$. There is a fishtail fiber S_1 in $N(n)$ and a section S_2 in $N(n)$ representing α_1 and α_2 respectively. In particular, S_1 is a smoothly immersed sphere with a unique double point, S_2 is a smoothly embedded sphere, S_1 and S_2 intersect exactly once, and $E(n)-S_1\cup S_2$ is simply connected.

None of S_1, S_2, or $S_1 \# S_2$ form a characteristic pair with X because $E(n)$ is spin and inclusion sends $H_2(N(n))$ to a direct summand of $H_2(E(n))$. For any Casson handle CH, define $Y_{\mathrm{CH}} = B^4 \cup \mathrm{CH} \cup h$ with CH attaching to a 0–framed unknot in ∂B^4 and a standard 2–handle h attaching to a $-n$–framed meridian of this unknot. Since we've verified the necessary hypotheses, Corollary 2.4 ensures that some Y_{CH} smoothly embeds into $E(n)$ in such a way that S_1 and S_2 are obtained by capping off smoothly embedded disks in B^4 by the first-stage disk of CH and the core of h. In particular, Y_{CH} generates the homology of $N(n)$. Additionally, there is a topologically embedded sphere in $E(n)$ representing α_1, and intersecting the section in $N(n)$ exactly once. In the $n = 2$ case, we can use the discussion from Gompf and Mrowka [21] to locate three disjoint copies of $N(2)$ in the $K3$ surface. So we obtain a pair consisting of a fishtail fiber and a section in each of these three copies of $N(2)$. Gompf (unpublished) has also observed that the union of these three pairs has a simply connected complement in the $K3$ surface. (Each nucleus contains a second fishtail fiber, and it is routine to use this to produce the nullhomotopies of the necessary meridians.) Then Corollary 2.4 allows us to choose Casson handles CH_1, CH_2, and CH_3 so that each has exactly one double point in its first-stage disk and the disjoint union of Y_{CH_1}, Y_{CH_2}, and Y_{CH_3} smoothly embeds into the $K3$ surface to generate its hyperbolic summand. Donaldson shows [6] that $E(2)$ cannot be expressed as a connected sum with one of the summands equal to $S^2 \times S^2$, which means it is impossible to replace any one of CH_1, CH_2, or CH_3 with a standard 2–handle and still find these embeddings. So we have realized the smallest number of kinks possible in the first-stage disk of each of these Casson handles.

This discussion can be applied to sharpen Freedman's construction of the first large $\mathbb{R}^4$, which is described in [13]. Although it is not clear at this stage what properties might be useful, it is likely that this extra control could provide exotic $\mathbb{R}^4$'s contained in connected sums of $S^2 \times S^2$'s with some additional structure. On the other hand, this corollary certainly does not apply if we instead choose n to be odd. In this case, the second paragraph in the proof of Lemma 2.2 ensures that α_1 cannot be represented by any topologically embedded sphere in $E(n)$ because α_1 is a characteristic element in $H_2(E(n))$ and $\sigma(E(n)) - \alpha_1^2 = -8n$ is not divisible by 16.

Given a configuration of smoothly immersed spheres, it is generally difficult to determine when it is not possible to find Casson handles that admit an embedding as in the previous corollary. There are some obvious examples where these Casson handles cannot exist because taking an ambient connected sum of spheres in the configuration would lead to a contradiction of Lemma 2.2. However, there are also examples where such a contradiction does not arise but the necessary Casson handles still fail to exist. This is illustrated in our final example of this section.

Example 2.6 Let Y_1 and Y_2 each be a copy of $\mathbb{C}P^2\#8\overline{\mathbb{C}P}^2$ and let $X = Y_1\#Y_2$. Also let $f_1, e_1, \dots, e_8, f_2, e_9, \dots, e_{16}$ be the standard basis for $H_2(X) = H_2(Y_1)\oplus H_2(Y_2)$. Then there are smoothly immersed spheres S_1 and S_2 in X with S_1 representing $3f_1 + e_1 + \cdots + e_8$ and S_2 representing $3f_2 + e_9 + \cdots + e_{16}$. These can be chosen to each have exactly one double point and so that each S_i is contained in the Y_i summand with $Y_i - S_i$ simply connected. Notice that $X - (S_1 \cup S_2)$ is also simply connected. Let F_1, F_2, and F be the surfaces obtained by resolving the double points of S_1, S_2, and $S_1 \# S_2$, respectively. Since (Y_1, F_1), (Y_2, F_2), and (Y, F) are all characteristic pairs, the corresponding quadratic forms $\tilde{q}_1\colon H_1(F_1, \mathbb{Z}_2) \to \mathbb{Z}_2$, $\tilde{q}_2\colon H_1(F_2, \mathbb{Z}_2) \to \mathbb{Z}_2$, and $\tilde{q}\colon H_1(F, \mathbb{Z}_2) \to \mathbb{Z}_2$ from [9, Corollary 1] are each well-defined. [9, Theorem 1] guarantees that $\mathrm{Arf}(\tilde{q}_1) = \mathrm{Arf}(\tilde{q}_2) = \frac{1}{8}(1-(-7)) = 1$. After observing that $\tilde{q} = \tilde{q}_1 \oplus \tilde{q}_2$, reversing the argument used in the proof of Lemma 2.2 ensures that there are not Casson handles CH_1 and CH_2 corresponding to this configuration as in Corollary 2.4. However, S_1 and S_2 are smoothly immersed spheres in X whose union has a simply connected complement, neither S_i is characteristic, and $(X, S_1 \# S_2)$ is a characteristic pair with vanishing Arf invariant.

3 Large $\mathbb{R}^4$'s in Stein surfaces

We now define a family of exotic $\mathbb{R}^4$'s that realize arbitrarily large (finite) values of the Taylor invariant and each admit a smooth orientation-preserving embedding into a compact Stein surface. To provide contrast, we also present a family of exotic $\mathbb{R}^4$'s that fail to embed into any Stein surface and investigate the implications of the existence of these two families.

We begin with an introduction to the Taylor invariant, first defined by Taylor [28]. Suppose that X is a smooth orientable open 4–manifold. Let $\mathcal{E}(X)$ denote the set of flat topological embeddings $e\colon B^4 \hookrightarrow X$ that restrict to a smooth embedding around some point $p \in \partial B^4$. For each $e \in \mathcal{E}(X)$, fix $\mathrm{Sp}(e)$ to be the collection of smooth closed spin 4–manifolds with hyperbolic intersection form that contain a smoothly embedded copy of the interior of $e(B^4)$. Roughly speaking, the Taylor invariant is computed by choosing the smallest second Betti number appearing in $\mathrm{Sp}(e)$ for each $e \in \mathcal{E}(X)$, dividing each in half, and then taking the supremum of the resulting integers. However, it turns out that this definition fails to provide a meaningful invariant when X is not spin. In order to address this issue, recall (see, for example, [24]) that X has associated homology groups $H_n^{\mathrm{lf}}(X, \mathbb{Z}_2)$ and cohomology groups $H_c^n(X, \mathbb{Z}_2)$. These groups satisfy the duality relations $H_n^{\mathrm{lf}}(X, \mathbb{Z}_2) \cong H^{4-n}(X, \mathbb{Z}_2)$ and $H_c^n(X, \mathbb{Z}_2) \cong H_{4-n}(X, \mathbb{Z}_2)$. Given an element in $H^2(X, \mathbb{Z}_2)$, we will say that its dual is the

corresponding element in $H_2^{\mathrm{lf}}(X,\mathbb{Z}_2)$ from the first duality isomorphism. An element in $H^2(X,\mathbb{Z}_2)$ is said to be *compactly supported* if its dual is represented by a smoothly embedded closed surface in X. Since the standard maps $H_n(X,\mathbb{Z}_2)\to H_n^{\mathrm{lf}}(X,\mathbb{Z}_2)$ and $H_c^n(X,\mathbb{Z}_2)\to H^n(X,\mathbb{Z}_2)$ commute with these duality isomorphisms in the obvious way, an element of $H^2(X,\mathbb{Z}_2)$ is compactly supported precisely when the original cohomology class pulls back to an element in $H_c^2(X,\mathbb{Z}_2)$. (This whole discussion also holds with coefficients in $\mathbb{Z}$ or any field.) If F is a smoothly embedded, closed surface in X that represents the dual to $w_2(X)\in H^2(X,\mathbb{Z}_2)$, then $X-F$ is spin. We can now give a complete, precise definition of the Taylor invariant.

Definition 3.1 Suppose that X is a smooth orientable 4–manifold. If X is spin, then the Taylor invariant of X is defined as

$$\gamma(X)=\sup_{e\in\mathcal{E}(X)}\ \min_{N\in\mathrm{Sp}(e)}\ \tfrac{1}{2}\beta_2(N).$$

If X is not spin but $w_2(X)$ is compactly supported, then the Taylor invariant of X, still denoted $\gamma(X)$, is the supremum of $\gamma(X-F)-\dim_{\mathbb{Z}_2}H_1(F,\mathbb{Z}_2)$ with F ranging over all smoothly embedded closed surfaces in X that represent the dual to $w_2(X)$. If $w_2(X)$ is not compactly supported, then the Taylor invariant of X is defined to be $\gamma(X)=-\infty$.

It follows from this definition that the Taylor invariant takes values in $\mathbb{Z}\cup\{\pm\infty\}$. It is easy to verify that $\mathrm{Sp}(e)$ is nonempty for any $e\in\mathcal{E}(X)$ when X is spin, ensuring that this invariant is indeed well-defined. Notice that it does not depend on a choice of orientation.

All of the $\mathbb{R}^4$'s presented in this section are large because they have nonzero Taylor invariant. We remark that it is still unknown if there exists a large $\mathbb{R}^4$ admitting a Stein structure or a small $\mathbb{R}^4$ not admitting a Stein structure. [28, Remark 4.5] ensures that all Stein $\mathbb{R}^4$'s have vanishing Taylor invariant, as any $\mathbb{R}^4$ with nonvanishing Taylor invariant has infinitely many 3–handles in any handle decomposition. So the former would provide the first example of a large $\mathbb{R}^4$ with vanishing Taylor invariant. In particular, our examples do not admit Stein structures. As mentioned above, small exotic $\mathbb{R}^4$'s admitting Stein structures were produced by Gompf [16; 20].

An important tool for building open 4–manifolds is an operation called end-summing. This operation is essentially the noncompact analogue to boundary summing. We present the definition of end-summing that is given by Gompf [14], but note that there are multiple equivalent definitions appearing in the literature.

Definition 3.2 Let X_1 and X_2 be smooth oriented noncompact 4–manifolds. Suppose $\gamma_1\colon [0,\infty)\to X_1$ and $\gamma_2\colon [0,\infty)\to X_2$ are smooth properly embedded rays with tubular neighborhoods ν_1 and ν_2, respectively. The *end-sum* of X_1 and X_2 along γ_1 and γ_2 is defined as

$$X_1 \cup_{\varphi_1} I\times\mathbb{R}^3 \cup_{\varphi_2} X_2,$$

where $\varphi_1\colon \left[0,\frac{1}{2}\right)\times\mathbb{R}^3\to\nu_1$ and $\varphi_2\colon \left(\frac{1}{2},1\right]\times\mathbb{R}^3\to\nu_2$ are orientation-preserving diffeomorphisms that respect the $\mathbb{R}^3$–bundle structures.

The resulting diffeomorphism type generally depends on the rays γ_1 and γ_2, but does not depend on any other choices made in the definition. Notice that it is important to fix an orientation on both 4–manifolds before end-summing, or else the operation is not well-defined. When end-summing with open Stein surfaces, we will always assume that their complex orientations have been fixed. It follows from [3] that end-summing Stein surfaces together produces another Stein surface.

End-summing was originally defined only for $\mathbb{R}^4$'s, and its behavior is simpler in this case. End-summing a smooth oriented open 4–manifold X with some (possibly exotic) oriented $\mathbb{R}^4$ produces a smooth oriented 4–manifold X' that is homeomorphic (but possibly not diffeomorphic) to X. Furthermore, this homeomorphism $X'\to X$ can be chosen so that it restricts to an embedding on X that is isotopic to the identity. Using any homeomorphism meeting this description, we can uniquely (up to isotopy) transport the smooth structure of X' to a smooth structure on the underlying topological 4–manifold of X. In summary, end-summing a smooth oriented open 4–manifold with an oriented $\mathbb{R}^4$ defines a new smooth structure on the same underlying topological 4–manifold. The resulting smooth 4–manifold is oriented by the orientation on this underlying topological 4–manifold, and this agrees with the orientation induced by X'. It follows from [14, Appendix] that the isotopy class of the smooth structure produced by this operation does not depend on the choice of ray used in the $\mathbb{R}^4$. Similarly, simultaneously end-summing X with multiple $\mathbb{R}^4$'s uniquely defines an isotopy class that only depends on the choice of rays in X. A slightly stronger statement from that appendix ensures the diffeomorphism type of an oriented $\mathbb{R}^4$, which we will denote by either $\natural_{i=1}^n R_i$ or $R_1\natural\cdots\natural R_n$, that results from simultaneously end-summing the standard $\mathbb{R}^4$ with each oriented (possibly exotic) $\mathbb{R}^4$ from some (possibly infinite) collection $\{R_i\}_{i=1}^n$ is independent of any choice of rays. When n is finite, $\natural_{i=1}^n R_i$ is diffeomorphic to the result of inductively end-summing R_i with R_{i-1} for each $1<i\le n$. We will often use $\natural_n R$ to denote $\natural_{i=1}^n R_i$ when each R_i is a copy of R.

In order to end-sum with exotic $\mathbb{R}^4$'s in ambient 4–manifolds, we will require the definition of shaved embeddings from [14].

Definition 3.3 Let R be an $\mathbb{R}^4$ and let X be any smooth 4–manifold. We say that a smooth embedding $i\colon R \hookrightarrow X$ is shaved if $i(R) = \mathrm{int}(B)$ for some flat topological 4–ball B in X with a (nonempty) subset $U \subseteq \partial B$ that is a smooth codimension-1 submanifold of X. Given orientations on R and X, we say that R is a *shaved* $\mathbb{R}^4$ *in* X if $R \subseteq X$ and inclusion defines a smooth shaved orientation-preserving embedding of R into X.

If R_1 and R_2 are shaved $\mathbb{R}^4$'s in smooth connected oriented open 4–manifolds X_1 and X_2 respectively, then it easy to verify that $R_1 \natural R_2$ admits a smooth shaved orientation-preserving embedding into any end-sum of X_1 and X_2. Similarly, $R_1 \natural R_2$ admits a smooth shaved orientation-preserving embedding into $X_1 \# X_2$. (For example, these claims follow from the solution to [22, Exercise 9.4.8(a)].) The same discussion holds for finite iterated end-sums, and extends in the obvious way to the case of infinite end-sums provided they are all performed simultaneously as described above.

We are prepared to define the family of exotic $\mathbb{R}^4$'s described earlier, providing some additional structure as well. The usefulness of this extra structure will be illustrated in the next section, but it is worth noting that either of the final two properties below ensures each of these $\mathbb{R}^4$'s contains an uncountable family of distinct $\mathbb{R}^4$'s sharing its Taylor invariant. Our construction is closely related to [28, Example 5.10], which finds $\mathbb{R}^4$'s that satisfy properties (1), (3), and (4) below but may not satisfy property (2). In particular, that example provides no information about the relationship between the resulting $\mathbb{R}^4$'s and Stein surfaces.

Theorem 3.4 *There are exotic $\mathbb{R}^4$'s realizing arbitrarily large (finite) values of the Taylor invariant that each admit a smooth embedding into a compact Stein surface. More specifically, there is a smooth oriented 4–manifold L homeomorphic to $\mathbb{R}^4$ that satisfies the following properties:*

(1) *$\gamma(L)$ is an arbitrarily large integer, each $\gamma(\natural_n L)$ is finite for $n \in \mathbb{Z}^{>0}$, and $\lim_{n\to\infty} \gamma(\natural_n L) = \infty$.*

(2) *There is a compact connected Stein surface S such that each $\natural_n L$ for $n \in \mathbb{Z}^{>0} \cup \{\infty\}$ admits a smooth shaved orientation-preserving embedding into an open Stein surface S_n obtained by simultaneously end-summing the standard $\mathbb{R}^4$ with n copies of the interior of S.*

(3) *There is a smooth oriented open simply connected 4–manifold Z_n for each $n \in \mathbb{Z}^{>0}$ with an even, positive-definite, unimodular intersection form such that $Z_n - \mathrm{int}(Y_n)$ is orientation-preserving diffeomorphic to $\natural_n L - \mathrm{int}(K_n)$ for some smooth compact codimension-0 submanifolds $Y_n \subseteq Z_n$ and $K_n \subseteq \natural_n L$.*

(4) *Each $\natural_n L$ for $n \in \mathbb{Z}^{>0}$ admits a smooth shaved orientation-preserving embedding into $\#n\,\overline{\mathbb{C}P^2}$.*

Proof We construct L using a standard cut-and-paste argument, but apply Lemma 2.2 to maintain control over the first stage of the Casson handle located during this construction. If d is any integer with $d > 1$ and $d \equiv \pm 1 \pmod 8$, then there exists a positive integer s with $d^2 - 1 = 16s$. We start by fixing any pair (d, s) of positive integers satisfying this equality. Let $X = \overline{\mathbb{C}P}^2 \# 16s\, \mathbb{C}P^2$ and let $e_0, e_1, \dots, e_{16s}$ be the standard basis for $H_2(X)$. It is easy to construct a smoothly immersed sphere S in X representing the element $\alpha = de_0 + e_1 + \cdots + e_{16s} \in H_2(X)$ that has $g = \frac{1}{2}(d-1)(d-2)$ negative double points and no positive double points. This can be chosen so that there is a smoothly embedded sphere in X intersecting S exactly once, ensuring that $X - S$ is simply connected. Observe that (X, S) is a characteristic pair with $\mathrm{Arf}(X, S) = 0$ because

$$\tfrac{1}{8}(S \cdot S - \sigma(X)) = \tfrac{1}{8}((-d^2 + 16s) - (-1 + 16s)) = -\tfrac{1}{8}(d^2 - 1) = -2s.$$

So S satisfies the hypotheses of Lemma 2.2 with $S \cdot S = -d^2 + 16s = -1$. Thus, there is a neighborhood $W \subseteq X$ of S that is equal to the interior of the smoothly embedded copy of $B^4 \cup \mathrm{CH}$, where CH is a Casson handle attaching to a -1–framed unknot in ∂B^4 whose first-stage disk has g negative double points and no positive double points. Let T_1 denote the 1–stage tower of CH. Notice that W is homeomorphic to $\overline{\mathbb{C}P}^2 - \{\mathrm{pt}\}$. In particular, there is a flat proper topological embedding $j\colon S^3 \times [0, \infty) \hookrightarrow W$. We call on Quinn's stable homeomorphism theorem [10, Theorem 8.1A] to arrange for j to be smooth on a neighborhood of $p \times (0, \infty) \subseteq S^3 \times [0, \infty)$ for some point $p \in S^3$. Define C to be the subset of W obtained by removing $j(S^3 \times (a, \infty))$ for some $a \in \mathbb{R}^{>0}$, and then choose C' to be any smooth compact codimension-0 submanifold of W containing C. Next, recall that the standard 2–handle can be written as $T_1 \cup$ (2–handles) with these standard 2–handles attaching to any collapsing set on the frontier of T_1. So there is a smooth orientation-preserving embedding of CH into the standard 2–handle that sends the interior of T_1 in CH to the interior of T_1 in this description. Using the standard handle decomposition for $\overline{\mathbb{C}P}^2$, this extends to a smooth orientation-preserving embedding $i\colon W \hookrightarrow \overline{\mathbb{C}P}^2$ that induces an isomorphism on the level of second homology.

As illustrated in Figure 5, we can now define $(L, K) = (\overline{\mathbb{C}P}^2 - i(C), \overline{\mathbb{C}P}^2 - \mathrm{int}(i(C')))$. Notice that L and K each inherit both a smooth structure and an orientation from $\overline{\mathbb{C}P}^2$. It easily follows from the Mayer–Vietoris sequence and Seifert–van Kampen theorem that $H_2(L) = 0$ and $\pi_1(L) = 1$. By construction, L is simply connected at infinity because its unique end is homeomorphic to $S^3 \times \mathbb{R}$. Hence, Freedman's criterion from [8, Corollary 1.2] ensures that L is indeed homeomorphic to $\mathbb{R}^4$. It is clear from our construction that L is a shaved $\mathbb{R}^4$ in $\overline{\mathbb{C}P}^2$.

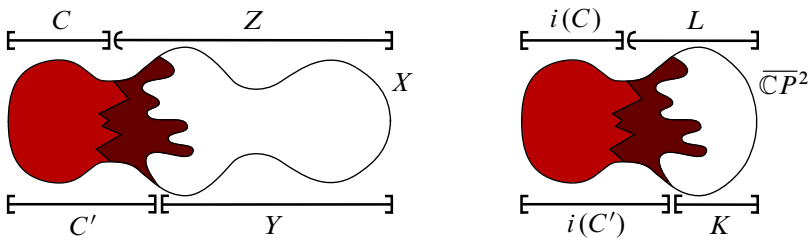

Figure 5: Constructing a large $\mathbb{R}^4$ in $\overline{\mathbb{C}P}^2$

We will work backwards to verify that properties (1)–(4) are satisfied. Since L is a shaved $\mathbb{R}^4$ in $\overline{\mathbb{C}P}^2$, it is immediate from the discussion after our definition of end-summing that property (4) holds. Next, we consider property (3). Let $(Z,Y) = (X-C, X-\mathrm{int}(C'))$, so that Z and Y each inherit both a smooth structure and orientation from X. Applying the Mayer–Vietoris sequence and Seifert–van Kampen theorem again, we find that $H_2(Z) = \langle\alpha\rangle^{\perp}$ and $\pi_1(Z) = 1$. Since α is characteristic with $\alpha\cdot\alpha = -1$, we can conclude that Q_Z is even, positive-definite, and unimodular. Observe that $L-\mathrm{int}(K)$ is orientation-preserving diffeomorphic to $Z-\mathrm{int}(Y)$ because $L-\mathrm{int}(K) = i(C'-C)$ and $Z-\mathrm{int}(Y) = C'-C$. This is illustrated in Figure 5. Now set Z_n for each $n\in\mathbb{Z}^{>0}$ equal to the result of simultaneously end-summing the standard $\mathbb{R}^4$ with n copies of Z (using an arbitrary choice of rays). For each $n\in\mathbb{Z}^{>0}$, let $Y_n\subseteq Z_n$ (resp. $K_n\subseteq \natural_n L$) be the result of ambiently boundary summing together the copies of Y (resp. K) coming from each copy of Z (resp. L) used in the construction of Z_n (resp. $\natural_n L$). It is clear that these ambient boundary sums can be performed so that each $Y_n\subseteq Z_n$ and $K_n\subseteq\natural_n L$ are the necessary pairs to ensure that property (3) holds. Note also that each Q_{Z_n} has rank $16sn$.

We turn to property (2). This is the step that requires the first-stage disk of CH to have only negative double points, as we arranged for in the first paragraph. Notice that W is the interior of a smoothly embedded $B^4\cup T_1\cup \mathrm{CH}_1\cup\cdots\cup\mathrm{CH}_g\subseteq X$, where T_1 is attaching to a -1–framed unknot in ∂B^4 and each CH_i is a second-stage Casson handle attaching to the frontier of T_1. Let $A\subseteq W$ be the result of smoothly isotoping $B^4\cup T_1$ into its own interior using the collared neighborhood of its boundary. Since A is compact, we can arrange for A to be contained in the interior of $C\subseteq W$ by choosing $a\in\mathbb{R}^{>0}$ sufficiently large during the construction of C. This ensures that L is a shaved $\mathbb{R}^4$ in $\overline{\mathbb{C}P}^2-i(A)$. We will now use relative Kirby calculus to see that $\overline{\mathbb{C}P}^2-i(A)$ is the interior of a compact Stein surface. Observe that Figure 6 provides a handle decomposition for $\overline{\mathbb{C}P}^2$ with $i(A)$ equal to the union of the 0–handle, all 1–handles, and the single -1–framed 2–handle, so that $\overline{\mathbb{C}P}^2-i(A)$ is the interior of the relative handlebody S described by Figure 7. Reversing the orientation on this relative

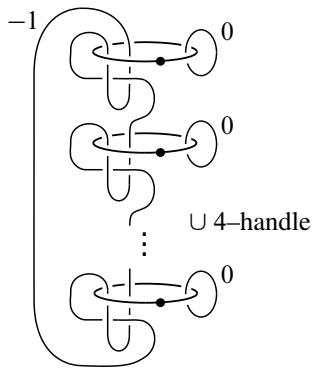

Figure 6: Handle decomposition of $\overline{\mathbb{C}P}^2$

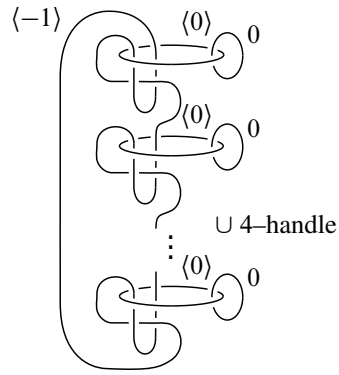

Figure 7: $S = \overline{\mathbb{C}P}^2 - \mathrm{int}(i(A))$

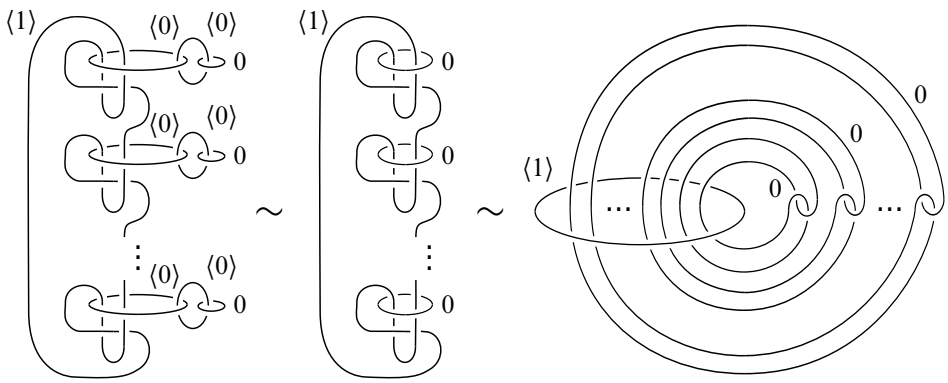

Figure 8: $S -$ (open 4–ball)

handlebody, removing the interior of its 4–handle, and then turning the result upside-down (reversing its orientation again) produces a description of $S -$ (open 4–ball) as the relative handlebody in Figure 8. We fill the new S^3 boundary with B^4 (in the only way possible) simply by blowing down the 4–manifold described by bracketed handles along the $\langle 1\rangle$–framed 2–handle in the final diagram of Figure 8. This results in a description of S as the handlebody shown in Figure 9. Since the 0–framed link in the final diagram of Figure 9 is Legendrian in $(S^3, \xi_{\mathrm{std}})$ and each component has Thurston–Bennequin number equal to 1, the criterion in [16] ensures that S is indeed a compact Stein surface. Hence, $\overline{\mathbb{C}P}^2 - i(A)$ is an open Stein surface that is the interior of the compact Stein surface S. Using our discussion after the definition of end-summing, we can now conclude that property (2) holds as well.

We end with property (1). Since S is a handlebody with no handles of index 1, 3, or 4 and each of the g 2–handles in Figure 9 has even framing, the double of S is

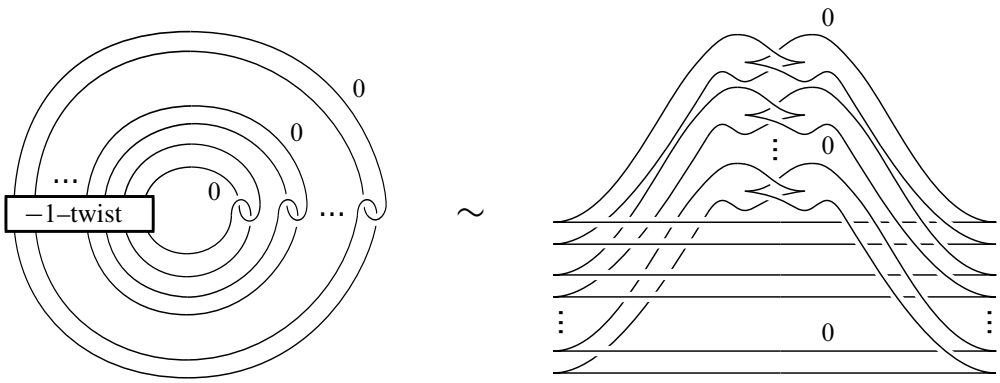

Figure 9: Filling with B^4 to obtain a description of S as a handlebody

diffeomorphic to $\#g\, S^2 \times S^2$. So L admits a smooth shaved orientation-preserving embedding into $\#g\, S^2 \times S^2$. Then our discussion after the definition of end-summing can again be applied to conclude that each $\natural_n L$ for $n \in \mathbb{Z}^{>0}$ admits a smooth embedding into $\#(ng)\, S^2 \times S^2$. In particular, $\gamma(\natural_n L) \leq ng < \infty$ for each $n \in \mathbb{Z}^{>0}$. On the other hand, it follows from another standard cut-and-paste argument (see, for example, [2] or [28]) using property (3), the rank of each $H_2(Z_n)$ that was computed above, and Furuta's $\frac{10}{8}$–inequality [12, Theorem 1] that $\gamma(\natural_n L) > 2ns$. In particular, choosing s to be sufficiently large ensures that $\gamma(L)$ is an arbitrarily large integer. Also, $\lim_{n\to\infty} \gamma(\natural_n L) = \infty$. So each claim in property (1) holds as well. □

The following corollary finds $\mathbb{R}^4$'s that display the opposite behavior from those produced in [20]. Specifically, the $\mathbb{R}^4$'s from [20] form an uncountable collection contained in $\mathbb{C}^2$ that each inherit a Stein structure.

Corollary 3.5 *There is a compact Stein surface S that contains uncountably many diffeomorphism types of exotic $\mathbb{R}^4$'s that each fail to admit a Stein structure. Furthermore, these $\mathbb{R}^4$'s all realize the same value of the Taylor invariant, and S can be chosen so that this value is an arbitrarily large integer.*

Proof Let L be an $\mathbb{R}^4$ constructed by Theorem 3.4 to realize an arbitrarily large (finite) value of the Taylor invariant. Choose S to be the corresponding compact Stein surface. By a standard argument (see, for example, [28]) that applies Taubes's extension of Donaldson theory [27], we can use property (3) above to conclude that there are uncountably many diffeomorphism types of shaved $\mathbb{R}^4$'s in L that each have Taylor invariant equal to the Taylor invariant of L. Each of these $\mathbb{R}^4$'s admits a smooth shaved orientation-preserving embedding into S. As noted earlier, [28, Remark 4.5] ensures that none of these $\mathbb{R}^4$'s admit a Stein structure. □

The exotic $\mathbb{R}^4$'s produced by this corollary are actually distinguishable by their compact equivalence classes. Alternatively, it is possible to modify this construction to arrange for these $\mathbb{R}^4$'s to all realize the same compact equivalence class but still represent distinct diffeomorphism classes. We will define compact equivalence classes and discuss this in more detail in the next section.

Next, we produce $\mathbb{R}^4$'s that behave similarly on the level of the Taylor invariant but do not interact nicely with Stein surfaces or definite 4–manifolds. These are defined from an exhaustion of the exotic $\mathbb{R}^4$, denoted by U, that was introduced by Freedman and Taylor [11]. Finding exotic $\mathbb{R}^4$'s by exhausting U was first done in [11, Corollary D] and was subsequently studied more carefully [14], but neither considered embeddings into Stein surfaces. We remark that U is typically referred to as the universal $\mathbb{R}^4$ because it is characterized as the unique $\mathbb{R}^4$ that contains every $\mathbb{R}^4$ as an end-summand.

Lemma 3.6 *Suppose that K is a topologically slice knot in S^3 that has a Legendrian representative in (S^3, ξ_{std}) with Thurston–Bennequin number equal to 1. Let $\overline{K}$ be the knot in S^3 obtained from K by switching all crossings, isotoped so that the two knots are disjoint and not linking. Then the handlebody Y_K defined by attaching 0–framed 2–handles to B^4 along both K and $\overline{K}$ smoothly embeds into U but does not smoothly embed into any Stein surface (either open or compact). In particular, this holds whenever K is the positive (untwisted) Whitehead double of a Legendrian knot in (S^3, ξ_{std}) with nonnegative Thurston–Bennequin number.*

Proof It easily follows from [14, Lemma 1.1] that Y_K admits a smooth embedding into some $\mathbb{R}^4$, so that the universal property of U guarantees a smooth embedding of Y_K into U. To obtain a contradiction, suppose that Y_K also admits a smooth embedding into some Stein surface S. By passing to the interior of the appropriate component, we can assume that S is both connected and open. Construct handlebodies X_K and $X_{\overline{K}}$ by attaching a 0–framed 2–handle to B^4 along K and $\overline{K}$, respectively. Notice boundary summing X_K and $X_{\overline{K}}$ produces Y_K. Our requirement on the Thurston–Bennequin number of K ensures that the interior S' of X_K is also an open Stein surface, so that the result S'' of end-summing S and S' (using any choice of rays) is again an open Stein surface [3]. Since $\overline{X_K} = X_{\overline{K}}$, restricting the embedding of Y_K into S to either X_K or $X_{\overline{K}}$ (depending on whether it is orientation-preserving or orientation-reversing) provides a smooth orientation-preserving embedding of $X_{\overline{K}}$ into the copy of S in S''. Isotoping X_K into its own interior using the collared neighborhood of its boundary defines a smooth orientation-preserving embedding of X_K into the copy of S' in S''. Using these two embeddings, ambiently boundary sum $X_{\overline{K}} \subseteq S \subseteq S''$

and $X_K \subseteq S' \subseteq S''$ to produce a new smoothly embedded copy of Y_K in S''. After choosing the appropriate orientations on K and $\bar{K}$, the knot $K \# \bar{K}$ is smoothly slice. The corresponding slice disk ensures the existence of a smoothly embedded sphere in Y_K representing the sum of a generating pair for $H_2(Y_K) = \mathbb{Z} \oplus \mathbb{Z}$. This sphere includes under the new embedding of Y_K to a smoothly embedded homologically essential sphere with trivial square in S''. However, it is well-known that this cannot happen in a Stein surface. So we have reached the necessary contradiction. The final claim from the statement follows from the proof of [1, Theorem 3.4] and the well-known fact that all Whitehead doubles are topologically slice. □

Theorem 3.7 *There are exotic $\mathbb{R}^4$'s realizing arbitrarily large (finite) values of the Taylor invariant that each contain a smooth compact codimension-0 submanifold that does not smoothly embed into any Stein surface (either open or compact) or any smooth closed definite 4–manifold. These compact submanifolds each admit a smooth embedding into U.*

Proof It is immediate from Lemma 3.6 that there is a smooth compact codimension-0 submanifold C_1 in U that does not smoothly embed into any Stein surface. (Alternatively, it is possible to prove the existence of C_1 directly by returning to the definition of U from [11].) The universal property of U guarantees that there is also a smooth compact codimension-0 submanifold C_2 in U that does not smoothly embed into any smooth closed definite 4–manifold, as there are several known constructions of exotic $\mathbb{R}^4$'s that have a submanifold satisfying these requirements; eg end-sum one of the $\mathbb{R}^4$'s constructed in [14] with itself using two different orientations. To define the necessary $\mathbb{R}^4$'s, fix an exhaustion $E_0 \subseteq E_1 \subseteq E_2 \subseteq \cdots$ of U with each E_i equal to the interior of a topological 4–ball in U. Choose this exhaustion so that each E_i contains both C_1 and C_2. Then each E_i is an $\mathbb{R}^4$ (inheriting its smooth structure from U) that has the necessary compact submanifold. Observe also that each $\gamma(E_i) < \infty$ because each E_i admits a smooth embedding into a smooth closed spin 4–manifold with hyperbolic intersection form, obtained by doubling a smooth compact codimension-0 submanifold of U. It is clear that $\lim_{i\to\infty} \gamma(E_i) = \gamma(U) = \infty$. □

Comparing the previous theorem to Gompf's results [19] can sometimes produce two nondiffeomorphic smooth structures on the same underlying topological 4–manifold, distinguishable by the existence of a smooth compact codimension-0 submanifold that does not smoothly embed into a Stein surface. In particular, we generalize the first statement of [19, Theorem 3.4] without using either the genus function or the Taylor invariant, which were both necessary to the proof given in that paper.

Corollary 3.8 *Every open topological 4–manifold can be smoothed so that it contains a smooth compact codimension-0 submanifold that does not smoothly embed into any Stein surface. As a result, every open topological 4–manifold X that topologically embeds into a 4–dimensional handlebody with all indices at most 2 admits at least two diffeomorphism classes of smooth structures. In particular, the interior of any 4–dimensional handlebody with all indices at most 2 admits at least two diffeomorphism classes of smooth structures.*

Proof Suppose that X is an open topological 4–manifold. [10, Section 8.2] produces a smooth structure Σ on X. It follows from Theorem 3.7 that U contains a smooth compact codimension-0 submanifold that does not smoothly embed into any Stein surface. If X is orientable, the necessary smooth structure Σ' on X is obtained by end-summing X_Σ with U (using any orientations and any choice of rays). If X is nonorientable, fixing an orientation on a tubular neighborhood of some smooth properly embedded ray γ in X_Σ allows us to still perform this end-sum operation to obtain the necessary smooth structure Σ' on X. So the first claim holds.

Next, suppose that X topologically embeds into a 4–dimensional handlebody H with all indices at most 2. If X is orientable, set $\widetilde{X} = X$. Otherwise, set $\widetilde{X}$ equal to the orientable double cover of X. Choose $\widetilde{H}$ analogously for H and let $\pi\colon \widetilde{H} \to H$ denote the corresponding covering map (equal to the identity in the orientable case). So X inherits a smooth structure Σ'' from a Casson smoothing on the interior of H produced by [19, Lemma 3.2], with this Casson smoothing chosen so that its lift under π smoothly embeds into some Stein surface. Notice that $\widetilde{X}$ topologically embeds into $\widetilde{H}$ and π restricts to a covering map $\pi_X\colon \widetilde{X} \to X$. Then Σ'' lifts to a smooth structure $\widetilde{\Sigma}'' = \pi_X^* \Sigma''$ on $\widetilde{X}$ and $\widetilde{X}_{\widetilde{\Sigma}''}$ smoothly embeds into this Stein surface. For $\widetilde{\Sigma}' = \pi_X^* \Sigma'$, it is clear that $\widetilde{X}_{\widetilde{\Sigma}'}$ and $\widetilde{X}_{\widetilde{\Sigma}''}$ are not diffeomorphic. As needed, this means that $X_{\Sigma'}$ and $X_{\Sigma''}$ are also not diffeomorphic. The final sentence of the statement clearly follows as well. □

Our final corollary of this section uses Theorem 3.4 to produce an exotic $\mathbb{R}^4$ with infinite Taylor invariant that smoothly embeds into an open Stein surface, and then applies Theorem 3.7 to conclude that this property distinguishes it from U. The results from [19, Section 7] allow us to subsequently locate uncountably many $\mathbb{R}^4$'s meeting this description. This technique is discussed in more detail at the end of the next section. Combining all of the known work about exotic $\mathbb{R}^4$'s actually produces many examples with infinite Taylor invariant, some of which are also not diffeomorphic to U. For example, it is straightforward to modify [28, Example 5.10] to find uncountably many $\mathbb{R}^4$'s in $\mathbb{C}P^2$ with infinite Taylor invariant. However, it is again unclear how any of these previous constructions relate to Stein surfaces.

Corollary 3.9 *There is an exotic $\mathbb{R}^4$, denoted L_∞, with infinite Taylor invariant that admits a smooth embedding into an open Stein surface. Additionally, every smooth compact codimension-0 submanifold of L_∞ admits a smooth embedding into a finite connected sum of $\overline{\mathbb{C}P}^2$'s. Either of these properties is sufficient to distinguish the diffeomorphism type of L_∞ from the diffeomorphism type of U. Furthermore, L_∞ contains uncountably many diffeomorphism types of exotic $\mathbb{R}^4$'s that also have infinite Taylor invariant.*

Proof Let $L_\infty = \natural_\infty L$, where L is any exotic $\mathbb{R}^4$ produced by Theorem 3.4. It is clear from properties (1), (2) and (4) of Theorem 3.4 that $\gamma(L_\infty) = \infty$ and the necessary embeddings exist. On the other hand, Theorem 3.7 guarantees that U does not satisfy either of these properties. Finally, [19, Theorem 7.1] locates the necessary $\mathbb{R}^4$'s inside of L_∞ to ensure the final claim holds as well. □

Determining when constructions of $\mathbb{R}^4$'s with infinite Taylor invariant provide a new description of U seems to be a difficult problem in general. For example, equipping L_∞ with the orientation induced from the orientation on L allows us to define $L_\infty \natural \overline{L_\infty}$. Notice that $L_\infty \subseteq L_\infty \natural \overline{L_\infty} \subseteq U$. It mimics the behavior of U in the following diffeomorphisms: $L_\infty \natural (L_\infty \natural \overline{L_\infty}) \cong_{\text{diff}} L_\infty \natural \overline{L_\infty} \cong_{\text{diff}} (L_\infty \natural \overline{L_\infty}) \natural \overline{L_\infty}$. This new exotic $\mathbb{R}^4$ also shares the property with U that it contains a smooth compact codimension-0 submanifold that does not smoothly embed into any smooth closed definite 4–manifold; eg apply the argument from [22, Theorem 9.4.3] to copies of L and $\bar{L}$ in $L_\infty \natural \overline{L_\infty}$. In particular, $L_\infty \natural \overline{L_\infty}$ is certainly not diffeomorphic to L_∞. On the other hand, it is possible that $L_\infty \natural \overline{L_\infty}$ still shares the property with L_∞ that it admits a smooth embedding into some Stein surface.

4 The Taylor invariant, the genus-rank function, and compact equivalence classes

To illustrate the usefulness of the $\mathbb{R}^4$'s defined in the previous section, we consider their applications to constructing and manipulating smooth structures on open 4–manifolds. In particular, we show that the genus function can be preserved while end-summing with arbitrarily large $\mathbb{R}^4$'s, or at least only disrupted in a small, controlled way. Conversely, we also see that this statement is false for the universal $\mathbb{R}^4$. Our observations will facilitate a procedure for independently controlling the Taylor invariant, the genus-rank function, and compact equivalence classes, often realizing infinitely many values of one invariant while keeping the other two fixed.

We start with definitions of the genus and genus-rank functions, following those given in [19].

Definition 4.1 Let X be a smooth oriented 4–manifold with torsion subgroup $T \subseteq H_2(X)$. The *genus function* $G\colon H_2(X) \to \mathbb{Z}^{\geq 0}$ is the function assigning to each $\alpha \in H_2(X)$ the smallest possible genus of a smoothly embedded compact oriented surface F representing α. If $H_2(X)/T$ is a free abelian group, then the corresponding *genus-rank function* is the function $\mathbb{Z}^{\geq 0} \to \mathbb{Z}^{\geq 0} \cup \{\infty\}$ that sends each $g \in \mathbb{Z}^{\geq 0}$ to the rank of the rational span in $H_2(X)/T$ of all $\alpha \in H_2(X)$ with both $G(\alpha)$ and $|\alpha \cdot \alpha|$ less than or equal to g.

Notice that the genus-rank function is defined whenever X is homeomorphic to the interior of a handlebody with only finitely many 3–handles. The genus-rank function is an invariant of the diffeomorphism type of X, and changing the smooth structure on X can effect this invariant. In particular, we will frequently be able to distinguish smooth structures on the same underlying topological 4–manifold by the smallest $g \in \mathbb{Z}^{\geq 0}$ on which their genus-rank functions have a nonzero value. We call this integer the *first characteristic genus* of the corresponding genus-rank function. (As in [19], characteristic genera can also be defined more generally.) Although the genus-rank function is sometimes denoted by γ, we will reserve that symbol for the Taylor invariant.

Stein surfaces come equipped with an adjunction inequality that provides lower bounds on the genus function; see, for example, [19, Section 2]. If X is a smooth oriented open 4–manifold that admits a smooth orientation-preserving embedding $i\colon X \hookrightarrow S$ for some Stein surface S (oriented by its complex structure), then it inherits the adjunction inequality associated to S. More specifically, every $\alpha \in H_2(X)$ with $i_*(\alpha) \neq 0$ must satisfy

$$2G(\alpha) - 2 \geq \alpha \cdot \alpha + |\langle c_1(S), i_*(\alpha)\rangle|.$$

It is precisely this observation that is used in [19] to produce pointwise upper bounds on the genus-rank function, and to subsequently distinguish large families of smooth structures on handlebody interiors.

Our first task is to consider how end-summing with exotic $\mathbb{R}^4$'s effects the genus-rank function. Recall from the previous section that simultaneously end-summing a smooth oriented open 4–manifold with a collection of oriented $\mathbb{R}^4$ defines a new smooth structure on the same underlying topological 4–manifold. As above, the resulting smooth 4–manifold is oriented by the orientation on this underlying topological 4–manifold. The new genus-rank function is pointwise bounded below by the genus-rank function realized by the original smooth structure. The challenge seems to be finding upper bounds. To address this issue, the following lemma allows us to end-sum with certain large $\mathbb{R}^4$'s while preserving any adjunction inequalities that are inherited from embeddings into Stein surfaces.

Lemma 4.2 *Suppose that L is an oriented $\mathbb{R}^4$ constructed by Theorem 3.4. If $X_{\Sigma'}$ is a smooth oriented 4–manifold produced by simultaneously end-summing a smooth oriented open 4–manifold X_Σ with each oriented $\mathbb{R}^4$ from some (possibly infinite) collection $\{\natural_{n_i} L \mid n_i \in \mathbb{Z}^{>0} \cup \{\infty\}\}_{i=1}^N$, then the genus function on $X_{\Sigma'}$ satisfies every adjunction inequality inherited from a smooth orientation-preserving embedding of X_Σ into an open Stein surface that sends each ray used in the end-sum operation to a smooth properly embedded ray in the Stein surface.*

Proof We proceed by induction on N. First consider the case where $N = 1$, so that the smooth structure Σ' on X is obtained by end-summing X_Σ with $\natural_n L$ for $n = n_1 \in \mathbb{Z}^{>0} \cup \{\infty\}$. Let γ be the ray in X_Σ used to perform this end-sum operation. Suppose that $i\colon X_\Sigma \hookrightarrow S$ is a smooth orientation-preserving embedding of X_Σ into an open Stein surface S that sends γ to a smooth properly embedded ray γ' in S. Property (2) of Theorem 3.4 ensures that $\natural_n L$ sits inside of an open connected Stein surface S_n as a shaved $\mathbb{R}^4$. Let S' be obtained by end-summing S and S_n along the ray γ' in S and an arbitrary ray in S_n. Then S' admits a Stein structure by [3]. Using the fact that $\natural_n L$ is a shaved $\mathbb{R}^4$ in S_n, we can find a smooth embedding $p\colon [0,1] \to S'$ whose intersection with $S \subseteq S'$ is the ray γ' and whose intersection with $\natural_n L \subseteq S_n \subseteq S'$ is some smooth properly embedded ray in $\natural_n L$. The union of $i(X_\Sigma) \subseteq S \subseteq S'$, $\natural_k L \subseteq S_n \subseteq S'$, and an open regular neighborhood of this path p is a smoothly embedded copy of $X_{\Sigma'}$ in S'. The Stein structure on S' can be chosen so that this embedding is orientation-preserving and so that $c_1(S') = c_1(S) \oplus c_1(S_n) \in H^2(S') = H^2(S) \oplus H^2(S_n)$. Thus, we've constructed a smooth orientation-preserving embedding $i'\colon X_{\Sigma'} \hookrightarrow S'$ that is an extension of the embedding $i\colon X_\Sigma \hookrightarrow S$. For any $\alpha \in H_2(X)$, observe that $H_2(S') = H_2(S) \oplus H_2(S_n)$ and

$$\langle c_1(S'), i'_*(\alpha)\rangle = \langle c_1(S) \oplus c_1(S_n), i_*(\alpha) \oplus 0\rangle = \langle c_1(S), i_*(\alpha)\rangle.$$

Also, $i_*(\alpha) = 0$ if and only if $i'_*(\alpha) = 0$. It follows that the adjunction inequality on X_Σ inherited from the embedding $i\colon X_\Sigma \hookrightarrow S$ is also inherited by $X_{\Sigma'}$ from the embedding $i'\colon X_{\Sigma'} \hookrightarrow S'$. So the statement holds when $N = 1$. Furthermore, if i sends a collection of smooth properly embedded rays in X_Σ to smooth properly embedded rays in S, then this collection can be smoothly isotoped in X_Σ so that i' sends each to a smooth properly embedded ray in S'. Now induction provides the necessary result when N is finite. If $N = \infty$, then the result follows because every smoothly embedded compact oriented surface in $X_{\Sigma'}$ is contained in some $X_{\Sigma''}$ sitting inside $X_{\Sigma'}$ that is obtained from X_Σ by performing end-sums with only finitely many $\natural_{n_i} L$. □

As an immediate corollary, we can preserve the adjunction inequality on Stein surfaces while end-summing with $\mathbb{R}^4$'s that realize arbitrarily large values of the Taylor invariant.

Corollary 4.3 *There is a large, oriented $\mathbb{R}^4$, denoted by L, with the property that any smooth oriented 4–manifold $X_{\Sigma'}$ produced by simultaneously end-summing an open Stein surface X_Σ with each $\mathbb{R}^4$ from some (possibly infinite) collection $\{\natural_{n_i} L \mid n_i \in \mathbb{Z}^{>0} \cup \{\infty\}\}_{i=1}^N$ satisfies the adjunction inequality associated to this Stein surface. Furthermore, L can be chosen so that $\gamma(L)$ is an arbitrarily large positive integer, $\lim_{n\to\infty} \gamma(\natural_n L) = \infty$, each $\gamma(\natural_n L) < \infty$ for $n \in \mathbb{Z}^{\geq 0}$, and L does not admit a Stein structure.*

Proof The first claim follows from Lemma 4.2 because the identity on X_Σ obviously sends every smooth properly embedded ray to a smooth properly embedded ray. Property (1) of Theorem 3.4 guarantees the claims about the Taylor invariant of L. As above, [28, Remark 4.5] ensures that such an L does not admit a Stein structure because $\gamma(L) > 0$. □

The behavior of the exotic $\mathbb{R}^4$'s in Lemma 4.2 is not what we should expect in general. Our next example illustrates the different ways that end-summing with large $\mathbb{R}^4$'s can effect the genus function.

Example 4.4 Let X be obtained by connect summing infinitely many copies of $S^2 \times S^2$ and let Σ_{std} denote the standard smooth structure on X. Arrange for X to have a unique end by performing this sum in the appropriate way. End-summing $X_{\Sigma_{\text{std}}}$ with any exotic $\mathbb{R}^4$ will always produce the standard smooth structure again (see, for example, [28, Remark 6.5]), but [19, Example 3.6] constructs uncountably many diffeomorphism classes of Casson smoothings on X. These diffeomorphism classes are distinguished by the corresponding genus-rank functions (or their relative versions). Any smooth 4–manifold obtained by equipping X with one of these Casson smoothings admits a smooth orientation-preserving embedding into a Stein surface, and the inherited adjunction inequality ensures that it does not contain a smoothly embedded homologically essential sphere with trivial square. Therefore, Lemma 4.2 allows us to repeatedly end-sum each of these new smooth 4–manifolds with large $\mathbb{R}^4$'s and never recover the standard smooth structure on X. These $\mathbb{R}^4$'s can be chosen to have arbitrarily large (finite) values of the Taylor invariant or to have infinite Taylor invariant. With a bit more care, we can arrange for each Casson smoothing to be Stein, each element of the standard basis for $H_2(X)$ to realize equality in the corresponding adjunction inequalities, and one Casson handle from infinitely many $S^2 \times S^2$ summand in each smoothing to be some fixed Casson handle CH_0. Now end-summing with these exotic $\mathbb{R}^4$'s actually preserves the value of each genus function on this basis.

On the other hand, consider the $\mathbb{R}^4$'s produced by Theorem 3.7. These each have finite Taylor invariant but form an exhaustion of U, and it follows from the construction

of U in [11] that we can choose some E from this exhaustion so that end-summing any of these Stein–Casson smoothings on X with E allows any one of the CH_0's to be isotoped to a standard 2–handle. This defines at least one standard copy of $S^2 \times S^2 - \{\mathrm{pt}\}$. End-summing instead with $\natural_n E$ for any $n \in \mathbb{Z}^{>0} \cup \{\infty\}$, which still has finite Taylor invariant when n is finite, produces smooth 4–manifolds that each have at least n standard copies of $S^2 \times S^2 - \{\mathrm{pt}\}$. When $n = \infty$, we can even conclude that each resulting smooth structure lies in the same isotopy class as Σ_{std}; eg apply the proof of [11, Theorem 3]. Similarly, end-summing any of these Stein–Casson smoothings with U also recovers the standard smooth structure. In reference to the discussion at the end of the previous section, it follows that $\natural_\infty E$ might be another good candidate to provide an alternate description of U.

Next, we introduce compact equivalence classes and some relevant terminology. Like the Taylor invariant, compact equivalence classes are designed to measure the complexity of shaved $\mathbb{R}^4$'s in smooth 4–manifolds. Our definition extends the one given in [14] to smooth 4–manifolds that are not necessarily homeomorphic to $\mathbb{R}^4$.

Definition 4.5 Let Σ_1 and Σ_2 be smooth structures on an oriented topological 4–manifold X. We write $\Sigma_1 \leq \Sigma_2$ if every flat topological embedding $e_1\colon B^4 \hookrightarrow X_{\Sigma_1}$ that is smooth around some $p_1 \in \partial B^4$ corresponds to a flat topological embedding $e_2\colon B^4 \hookrightarrow X_{\Sigma_2}$ that is smooth around some $p_2 \in \partial B^4$ with the property that interiors of $e_1(B^4)$ and $e_2(B^4)$ are orientation-preserving diffeomorphic. If $\Sigma_1 \leq \Sigma_2 \leq \Sigma_1$, then we say that Σ_1 and Σ_2 are compactly equivalent.

The relation $\leq$ descends to a partial ordering on compact equivalence classes. Similarly, the Taylor invariant is well-defined on compact equivalence classes on spin 4–manifolds. More precisely, the Taylor invariant is monotonic with respect to the ordering defined by $\leq$ if the underlying topological 4–manifold is spin. However, we will see that same value of the Taylor invariant can often be realized by distinct compact equivalence classes.

Typical methods for changing the compact equivalence class of a given smooth structure require it to come with some embeddings into smooth closed definite 4–manifolds. Our next definition introduces one of the more general version of this condition.

Definition 4.6 Let Σ be a smooth structure on an oriented topological 4–manifold X. We say that Σ is *compactly positive-definite* (resp. *compactly negative-definite*) if every Σ–smooth compact codimension-0 submanifold of X admits a Σ–smooth orientation-preserving embedding into a smooth closed simply connected positive-definite (resp. negative-definite) 4–manifold.

On open topological 4–manifolds admitting a smooth structure that is either compactly negative-definite or compactly positive-definite, there are at least two essentially different ways to end-sum with exotic $\mathbb{R}^4$'s to produce uncountably many new diffeomorphism types. As we will see below, these two methods can be differentiated by whether the compact equivalence class is the same for all resulting smooth structures.

In our first application of Lemma 4.2, we end-sum with exotic $\mathbb{R}^4$'s to manipulate the Taylor invariant while maintaining control over the genus-rank function. Conversely, we also use methods from [19] to modify the genus-rank function without changing the Taylor invariant.

Theorem 4.7 *Suppose that X is an open connected topological 4–manifold that is the interior of an oriented handlebody H with all indices at most 2, $0 < \beta_2(X) < \infty$, and $w_2(X) \in H^2(X, \mathbb{Z}_2)$ is compactly supported. Then there are smooth structures on X that realize infinitely many (arbitrarily large and finite) values of Taylor invariant but all produce the same genus-rank function, and infinitely many genus-rank functions occur in this way. If X is spin, then there are also smooth structures on X that produce infinitely many genus-rank functions but all realize the same arbitrarily large (finite) value of the Taylor invariant.*

Thus, we can independently control the Taylor invariant and genus-rank function under sufficiently nice conditions. Using techniques from the proof of [19, Lemma 7.3], we can sometimes realize each of these pairs by uncountably many distinct compact equivalence classes.

Addendum 4.8 *If the standard smooth structure that X inherits as a handlebody interior is compactly positive-definite, then each pair of Taylor invariant and genus-rank function from this theorem is realized by smooth structures on X whose compact equivalence classes have the order type of $\mathbb{R}^{\geq 0}$.*

Proof of Theorem 4.7 and Addendum 4.8 We will construct these smooth structures by end-summing Casson smoothings on X from [19] with $\mathbb{R}^4$'s from Theorem 3.4. In order to do this while sometimes realizing uncountably many compact equivalence classes, we must first consider these $\mathbb{R}^4$'s more carefully. Fix some L from Theorem 3.4, a positive real number t_0, and a homeomorphism $h\colon \mathbb{R}^4 \to L$. Apply Quinn's stable homeomorphism theorem [10, Theorem 8.1A] to isotope h so that it is smooth on a neighborhood of the positive real line in $\mathbb{R}^4$. For each $t \in \mathbb{R}^{\geq 0}$, let $B_t \subseteq \mathbb{R}^4$ denote the standard ball of radius $t_0 + t$ and let L_t denote the interior of $h(B_t)$. We can chose t_0 large enough that $K_1 \subset L_{t_0} \subset L$, where K_1 is the compact set from property (3) of Theorem 3.4. It is easy to conclude that each L_t is an oriented $\mathbb{R}^4$ that also satisfies properties (1)–(4) of Theorem 3.4. In particular, Lemma 4.2 holds

with L replaced by any L_t because it only requires property (2). We can now freely apply the properties ensured by Theorem 3.4 and the conclusion of Lemma 4.2 to L_t throughout this proof.

We proceed to define the necessary smooth structures on X. First, equip X with the orientation it inherits as a handlebody interior. Apply the hypothesis that $\beta_2(X) \neq 0$ to construct a collection $\{\Sigma_a \mid a \in \mathbb{Z}^{>0}\}$ of Casson smoothings on X corresponding to the handle decomposition from H using the procedure from the proof of [19, Theorem 3.4]. This procedure inductively constructs each Σ_a so that X_{Σ_a} inherits enough adjunction inequalities to ensure that the first characteristic genus of its genus-rank function is strictly larger than the first characteristic genus of the genus-rank function on any $X_{\Sigma_{a'}}$ with $a' < a$. Let Σ_{std} denote the standard smooth structure that X inherits as a handlebody interior, and fix a smooth properly embedded ray γ in $X_{\Sigma_{\text{std}}}$ that is contained in the interior of some 0–handle from H. Also fix the corresponding smooth properly embedded ray γ_a in each X_{Σ_a}. For each $a, n \in \mathbb{Z}^{>0}$ and $t \in \mathbb{R}^{\geq 0}$, define $\Sigma_{a,n,t}$ to be the smooth structure on X obtained by end-summing X_{Σ_a} with $\natural_n L_t$ along the ray γ_a in X_{Σ_a} and an arbitrary ray in $\natural_n L_t$. It now suffices to verify that these smooth structures realize the necessary invariants.

We start by considering the genus-rank functions that are produced by these new smoothings. For each $a \in \mathbb{Z}^{>0}$, let $g_a \in \mathbb{Z}^{\geq 0}$ be the first characteristic genus of the genus-rank function on X_{Σ_a}. As described above, any Σ_a and $\Sigma_{a'}$ for $a > a'$ can be distinguished because X_{Σ_a} inherits enough adjunction inequalities from smooth orientation-preserving embeddings into Stein–Casson smoothings on X to ensure that $g_a > g_{a'}$. Each of these embeddings for a given X_{Σ_a} restricts to the identity away from its Casson handles, so that each sends γ_a to some smooth properly embedded ray in the corresponding Stein–Casson smoothing on X. Hence, Lemma 4.2 ensures that each $X_{\Sigma_{a,n,t}}$ inherits these same adjunction inequalities as X_{Σ_a}. So the genus-rank function on each $X_{\Sigma_{a,n,t}}$ sends $g_{a'}$ to zero if $a' < a$. On the other hand, the genus-rank function on each $X_{\Sigma_{a,n,t}}$ is pointwise bounded below by the genus-rank function on X_{Σ_a}. In particular, the genus-rank function on each $X_{\Sigma_{a,n,t}}$ sends g_a to a nonzero integer. Therefore, any $\Sigma_{a,n,t}$ and $\Sigma_{a',n',t'}$ produce distinct genus-rank functions if $a \neq a'$. In addition, these pointwise lower bounds coupled with the hypothesis that $\beta_2(X) < \infty$ guarantee that each collection $\{\Sigma_{a,n,t} \mid n \in \mathbb{Z}^{>0}, t \in \mathbb{R}^{\geq 0}\}$ for a fixed $a \in \mathbb{Z}^{>0}$ produces only finitely many distinct genus-rank functions.

Next, we turn to the Taylor invariant. Our goal is to find upper and lower bounds on each $\gamma(X_{\Sigma_{a,n,t}})$ that only depend on n, although our lower bounds will sometimes need to depend on a as well. For each $n \in \mathbb{Z}^{>0}$, consider the smooth structure Σ'_n on X that is obtained by end-summing $X_{\Sigma_{\text{std}}}$ with $\natural_n L$ along the ray γ in $X_{\Sigma_{\text{std}}}$ and an arbitrary ray in $\natural_n L$. We will use the proof of [28, Theorem 6.4] to verify that each $\gamma(X_{\Sigma'_n}) < \infty$.

This theorem applies to $X_{\Sigma_{\text{std}}}$ because H has no 3–handles, $\beta_2(X) < \infty$, and $w_2(X)$ is compactly supported. Its proof produces smooth 4–manifolds $M(\rho)$ for $\rho \in \mathbb{Z}^{>0}$ that each have finite Taylor invariant. It is straight-forward to construct a smooth embedding of any $X_{\Sigma'_n}$ into some $M(\rho)$, sending duals of $w_2(X)$ to duals of $w_2(M(\rho))$. As needed, this means that each $\gamma(X_{\Sigma'_n}) \leq \gamma(M(\rho)) < \infty$ for some $\rho \in \mathbb{Z}^{>0}$. Next, recall that every Casson handle admits a smooth orientation-preserving embedding into the standard 2–handle that preserves attaching regions. So each X_{Σ_a} admits a smooth orientation-preserving embedding into $X_{\Sigma_{\text{std}}}$ that sends γ_a to γ. It follows that each $X_{\Sigma_{a,n,t}}$ admits a smooth orientation-preserving embedding into $X_{\Sigma'_n}$ that maps duals of $w_2(X)$ to duals of $w_2(X)$. Therefore, each $\gamma(X_{\Sigma_{a,n,t}}) \leq \gamma(X_{\Sigma'_n}) < \infty$. In particular, the Taylor invariant realized by any given $\Sigma_{a,n,t}$ has a finite upper bound that is only dependent on the parameter $n \in \mathbb{Z}^{>0}$. On the other hand, the Taylor invariant realized by each $\Sigma_{a,n,t}$ is bounded below by $\gamma(\natural_n L_{t_0}) - d_a$, where d_a is equal to the $\mathbb{Z}_2$–dimension of $H_1(F, \mathbb{Z}_2)$ for some smoothly embedded closed surface F in X_{Σ_a} that is dual to $w_2(X)$. This lower bound depends on the choice of both $a, n \in \mathbb{Z}^{>0}$, but it can be replaced by the lower bound $\gamma(\natural_n L_{t_0})$ when X is spin. Property (1) of Theorem 3.4 ensures that both lower bounds grow to be arbitrarily large if we let n tend to infinity while fixing a. So we can conclude that any collection $\{\Sigma_{a,n,t} \mid t \in \mathbb{R}^{\geq 0}\}$ for a fixed $a, n \in \mathbb{Z}^{>0}$ realizes only finitely many values of the Taylor invariant, and the smallest Taylor invariant realized by this collection grows to be arbitrarily large (but finite) as n tends to infinity for a fixed a. If X is spin, then any $\{\Sigma_{a,n,t} \mid a \in \mathbb{Z}^{>0}, t \in \mathbb{R}^{\geq 0}\}$ for a fixed $n \in \mathbb{Z}^{>0}$ also realizes only finitely many values of the Taylor invariant and the smallest Taylor invariant realized by this collection still grows to be arbitrarily large, but finite, as n tends to infinity.

The rest of this proof will be a counting argument that applies the observations from the previous two paragraphs to verify that the necessary invariants have indeed been realized, starting with the claims made in the original statement. For any fixed $a \in \mathbb{Z}^{>0}$ and $t \in \mathbb{R}^{\geq 0}$, the collection $\{\Sigma_{a,n,t} \mid n \in \mathbb{Z}^{>0}\}$ produces only finitely many distinct genus-rank functions. So each contains smooth structures that realize infinitely many (arbitrarily large and finite) values of the Taylor invariant but all produce the same genus-rank function. Since infinitely many distinct genus-rank functions are produced in this way, the first sentence holds.

Next, suppose that X is spin. For any fixed $n \in \mathbb{Z}^{>0}$ and $t \in \mathbb{R}^{\geq 0}$, the collection $\{\Sigma_{a,n,t} \mid a \in \mathbb{Z}^{>0}\}$ realizes only finitely many values of the Taylor invariant. So each contains smooth structures that produce infinitely many distinct genus-rank functions but all realize the same value of the Taylor invariant. Arbitrarily large (finite) values of the Taylor invariant are realized in this way. Therefore, the second sentence is also true. We have completed the proof of the original statement.

Before proceeding to the addendum, we analyze the compact equivalence classes that are realized by these new smooth structures. For the remainder of this proof, we suppose that Σ_{std} is compactly positive-definite. We claim that $\Sigma_{a,n,t'} \leq \Sigma_{a,n,t}$ if and only if $t' \leq t$. Our argument will follow the proof of [19, Lemma 7.3]. One direction is clear. To see the other direction, suppose to the contrary that some $\Sigma_{a,n,t'} \leq \Sigma_{a,n,t}$ for $t' > t$. In particular, this means that $\natural_n L_t$ embeds into $X_{\Sigma_{a,n,t}}$ by a smooth orientation-preserving embedding whose image has compact closure. Then there exists smooth compact codimension-0 submanifolds $K_1 \subseteq X_{\Sigma_a}$ and $K_2 \subseteq \natural_n L_t$ with the property that $\natural_n L_t$ admits a smooth orientation-preserving embedding into the result K of boundary summing K_1 and K_2. Recall from above that each X_{Σ_a} admits a smooth orientation-preserving embedding into $X_{\Sigma_{\text{std}}}$, ensuring that $K_1 \subseteq X_{\Sigma_a}$ admits a smooth orientation-preserving embedding into some smooth closed simply connected positive-definite 4–manifold P. It then follows that K admits a smooth orientation-preserving embedding into $P \# (\natural_n L_t)$. Putting it all together, we've shown that $\natural_n L_t$ admits a smooth orientation-preserving embedding into a smooth compact codimension-0 submanifold of $P \# (\natural_n L_t)$. After reversing orientation, a standard argument (see, for example, [5]) applying Taubes's extension of Donaldson theory in [27] and property (3) from Theorem 3.4 produces the necessary contradiction. So our claim holds.

We are now prepared to find the smooth structures described in the addendum. Since any collection $\{\Sigma_{a,n,t} \mid t \in \mathbb{R}^{\geq 0}\}$ for a fixed $a, n \in \mathbb{Z}^{>0}$ realizes only finitely many values of the Taylor invariant and produces only finitely many distinct genus-rank functions, each has a subcollection $\mathcal{C}_{a,n}$ of smooth structures that all realize the same genus-rank function and Taylor invariant but represent uncountably many distinct compact equivalences classes. Furthermore, each $\mathcal{C}_{a,n}$ can be chosen so that these compact equivalence classes have the order type of $\mathbb{R}^{\geq 0}$. For any fixed $a \in \mathbb{Z}^{>0}$, the subcollections $\mathcal{C}_{a,n}$ realize infinitely many (arbitrarily large and finite) values of the Taylor invariant as n tends to infinity but only finitely many distinct genus-rank functions. So there are infinitely many distinct genus-rank functions that are each produced by smooth structures on X realizing infinitely many (arbitrarily large and finite) values of the Taylor invariant, with each pair occurring for compact equivalence classes with the order type of $\mathbb{R}^{\geq 0}$.

Suppose next that X is spin. For each fixed $n \in \mathbb{Z}^{>0}$, the subcollections $\mathcal{C}_{a,n}$ realize infinitely many distinct genus-rank functions as a tends to infinity, but only finitely many values of the Taylor invariant. Hence, some arbitrarily large (finite) value of the Taylor invariant is realized by smooth structures on X that produce infinitely many distinct genus-rank functions, and again each pair occurs for compact equivalence classes with the order type of $\mathbb{R}^{\geq 0}$. This completes the proof of the addendum. □

In the preceding proof, we ensured the necessary invariants were realized by producing sufficient bounds. As the next example illustrates, we can sometimes compute these invariants more explicitly.

Example 4.9 Let $X = S^2 \times \mathbb{R}^2$. Following [19, Theorem 3.10], we can choose Stein–Casson smoothings $\{\Sigma_a \mid a \in \mathbb{Z}^{>0}\}$ on X so that the first characteristic genus of the genus-rank function on each X_{Σ_a} is a. Furthermore, the existence of a smoothly embedded, homologically essential surface of genus strictly smaller than a in some X_{Σ_a} would violate the adjunction inequality associated to the Stein structure on X_{Σ_a}. Now construct $\Sigma_{a,n,t}$ for each $a, n \in \mathbb{Z}^{>0}, t \in \mathbb{R}^{\geq 0}$ as in the preceding proof. The first characteristic genus of the genus-rank function on each $X_{\Sigma_{a,n,t}}$ is equal to a because each still satisfies this adjunction inequality. So the genus-rank function on each $X_{\Sigma_{a,n,t}}$ is completely determined by the value of a, and different values of a will produce distinct genus-rank functions. Observe next that each $X_{\Sigma_{a,n,t}}$ has the peculiar property it contains a smoothly embedded copy of $\natural_n L_t$ and also admits a smooth embedding into $\natural_n L_t$. This means that each $\gamma(X_{\Sigma_{a,n,t}}) = \gamma(\natural_n L_t)$. Then there is some $t_n \in \mathbb{R}^{\geq 0}$ for each $n \in \mathbb{Z}^{>0}$ such that each $\gamma(X_{\Sigma_{a,n,t}}) = \gamma(\natural_n L)$ for all $t \geq t_n$, ensuring that the Taylor invariant realized by any $\Sigma_{a,n,t}$ for $t \geq t_n$ is completely determined by n. As in the preceding proof, the compact equivalence class of any $\Sigma_{a,n,t}$ and $\Sigma_{a,n,t'}$ are the same if and only if $t = t'$. In summary, we've found infinitely many genus-rank functions that are each produced by smooth structures on X realizing the same infinitely many (arbitrarily large and finite) values of the Taylor invariant, and each pair occurs for uncountably many compact equivalence classes. Notice that we have significantly more control in this situation than we did in the preceding proof.

The techniques used in the proof of Theorem 4.7 can be adapted to construct smooth structures that realize infinite Taylor invariant.

Theorem 4.10 *Suppose that X is an open connected topological 4–manifold that is the interior of an oriented handlebody H with all indices at most 2, $\beta_2(X) \neq 0$, and $w_2(X) \in H^2(X, \mathbb{Z}_2)$ is compactly supported. Then there are smooth structures on X that produce infinitely many genus-rank functions but all realize infinite Taylor invariant. If $\beta_2(X) = \infty$, then uncountably many genus-rank functions occur in this way.*

Proof It follows immediately from [19, Theorem 3.4] that there are Casson smoothings on X producing infinitely many distinct genus-rank functions, and we can apply [19, Theorem 3.5] to arrange for the cardinality to be uncountable when $\beta_2(X) = \infty$. Let L be a large, oriented $\mathbb{R}^4$ from Theorem 3.4. Then construct new smooth structures by end-summing each of these Casson smoothings on X with $\natural_\infty L$. Each resulting smooth

structure clearly realizes infinite Taylor invariant. As in the proof of Theorem 4.7 and Addendum 4.8, these end-sums can be performed so that any two can still be distinguished by the genus-rank functions they produce. (These genus-rank functions cannot be distinguished by their first characteristic genera alone in the uncountable case, but the argument still goes through identically.) □

Example 4.11 As in Example 4.4, let X be the connected sum of infinitely many copies of $S^2 \times S^2$ and let Σ_{std} be its standard smooth structure. Again, perform these connected sums so that X has a unique end. Then Theorem 4.10 defines smooth structures on X that produce uncountably many distinct genus-rank functions but all realize infinite Taylor invariant. At least on the standard basis for $H_2(X)$, we can follow Example 4.4 to arrange for the genus function from each resulting smooth structure to agree with the genus function from a Stein–Casson smoothing on X. However, it seems to be unknown if any Stein–Casson smoothing on X also realizes infinite Taylor invariant. For example, consider L_∞ from Corollary 3.9. It is immediate from the construction of L_∞ that it smoothly embeds into $X_{\Sigma_{\text{std}}}$, but it is not clear if L_∞ smoothly embeds into any Stein–Casson smoothing on X. For comparison, note that Example 4.4 ensures U smoothly embeds into $X_{\Sigma_{\text{std}}}$ but does not smoothly embed into any Stein–Casson smoothing on X.

Even if $w_2(X) \in H^2(X, \mathbb{Z}_2)$ is not compactly supported, we can still control the genus-rank function while realizing uncountably many distinct compact equivalence classes. However, the Taylor invariant will always equal $-\infty$ in this situation.

Theorem 4.12 *Suppose that X is an open connected topological 4–manifold that is the interior of an oriented handlebody H with all indices at most 2, $0 < \beta_2(X) < \infty$, and the standard smooth structure that X inherits as a handlebody interior is compactly positive-definite. Then there are smooth structures on X that all produce the same genus-rank function but represent compact equivalence classes with the order type of $\mathbb{R}^{\geq 0}$, and infinitely many genus-rank functions occur in this way.*

Proof Using a fixed $n \in \mathbb{Z}^{>0}$, construct smooth structures $\{\Sigma_{a,n,t} \mid a \in \mathbb{Z}^{>0}, t \in \mathbb{R}^{\geq 0}\}$ on X as in the proof of Theorem 4.7 and Addendum 4.8. The bounds produced in that proof on the resulting genus-rank functions still hold. Similarly, the claims made about compact equivalence classes are also still true. Therefore, we can choose subcollections $\mathcal{C}_a \subseteq \{\Sigma_{a,n,t} \mid t \in \mathbb{R}^{\geq 0}\}$ for each $a \in \mathbb{Z}^{>0}$ so that each contains smooth structures that all produce the same genus-rank function but represent compact equivalence classes with the order type of $\mathbb{R}^{\geq 0}$. Infinitely many genus-rank functions occur in this way. □

Example 4.13 Let $Y = \#m\,\mathbb{C}P^2$ for some $m \in \mathbb{Z}^{>0}$. Construct an open 4–manifold X by puncturing Y and then end-summing with infinitely many orientable $\mathbb{R}^2$–bundles over nonorientable surfaces. Choose these $\mathbb{R}^2$–bundles so that each has positive, odd Euler number. Now $w_2(X) \in H^2(X, \mathbb{Z}_2)$ is not compactly supported, so we lose all control over the Taylor invariant. However, notice that each of these $\mathbb{R}^2$–bundles (equipped with their standard smooth structures) smoothly embeds into a finite connected sum of $\mathbb{C}P^2$'s. So the standard smooth structure on X is compactly positive-definite. Since $\beta_2(X) = m < \infty$ and this standard smooth structure is inherited from a handlebody with all indices at most 2, Theorem 4.12 defines new smooth structures on X that all produce the same genus-rank function but realize uncountably many compact equivalence classes. This can be done for infinitely many distinct genus-rank function.

By forfeiting control over the genus-rank function, we can more carefully consider the relationship between compact equivalence classes and the Taylor invariant.

Theorem 4.14 *Suppose that X is an open connected topological 4–manifold that is the interior of an oriented handlebody H and the standard smooth structure that X inherits as a handlebody interior is compactly positive-definite. Then there are smooth structures on X that represent compact equivalence classes with the order type of $\mathbb{R}^{\geq 0}$. If H has finitely many 3–handles, $\beta_2(X) < \infty$, and $w_2(X) \in H^2(X, \mathbb{Z}_2)$ is compactly supported, then these can be chosen to all realize the same arbitrarily large (finite) value of the Taylor invariant.*

Proof For some fixed $a \in \mathbb{Z}^{>0}$, define a collection $\{\Sigma_{a,n,t} \mid n \in \mathbb{Z}^{>0}, t \in \mathbb{R}^{\geq 0}\}$ of smooth structures on X using the procedure in the proof of Theorem 4.7 and Addendum 4.8 but with the modification that Σ_a is simply this standard smooth structure on X. The claims made in that proof about the resulting compact equivalence classes still hold. Thus, there are subcollections $\mathcal{C}_n \subseteq \{\Sigma_{a,n,t} \mid t \in \mathbb{R}^{\geq 0}\}$ for each $n \in \mathbb{Z}^{>0}$ that realize compact equivalence classes with the order type of $\mathbb{R}^{\geq 0}$. Suppose next that H has finitely many 3–handles, $\beta_2(X) < \infty$, and $w_2(X) \in H^2(X, \mathbb{Z}_2)$ is compactly supported. Since [28, Theorem 6.4] still applies, the bounds on the Taylor invariant that are used in the proof of Theorem 4.7 and Addendum 4.8 also still hold. Therefore, these subcollections can be chosen so that the smooth structures in each $\mathcal{C}_n$ all realize the same value of the Taylor invariant. As needed, infinitely many (arbitrarily large and finite) values of the Taylor invariant occur in this way. □

Remark 4.15 The requirement that H has finitely many 3–handles could be replaced by the *few essential 3–handles* condition [28].

Example 4.16 Let X be the interior of the handlebody obtained by boundary summing together $\{H_i\}_{i=0}^{\infty}$ with each H_i constructed by attaching a 1–framed 2–handle to $B^4 \cup$ (1–handle) along the simplest knot that links the corresponding dotted circle $2i+1$ times. Observe that X is compactly positive-definite because $\mathbb{C}P^2$ can be obtained from any H_i by attaching a 2– and 4–handle. Since $H_2(X, \mathbb{Z}_2) = H_2(X) = 0$, it is clear that X satisfies all hypotheses from Theorem 4.14. Therefore, there are smooth structures on X representing uncountably many compact equivalence classes that all realize the same arbitrarily large (finite) value of the Taylor invariant. Notice that the genus-rank function provides no information in this case.

We can sometimes improve the applications presented in this section by realizing each combination of invariants by uncountably many distinct diffeomorphism types. This is achieved using the method introduced in [19, Section 7], which produces uncountable families of smooth structures by starting with a compactly negative-definite smooth structure on an open topological 4–manifold and then end-summing with small $\mathbb{R}^4$'s. Our argument relies on the fact that the $\mathbb{R}^4$'s used in the proof of each theorem above embed into smooth closed simply connected negative-definite 4–manifolds.

Theorem 4.17 *Suppose that X is an open connected topological 4–manifold that satisfies the hypotheses of Theorem 4.7, 4.10, 4.12, 4.14 or Addendum 4.8, as the interior of a handlebody H. If also the standard smooth structure that X inherits as the interior of H is compactly negative-definite, then each combination of genus-rank function, Taylor invariant, and compact equivalence class realized by this theorem or addendum can be chosen so that it occurs for uncountably many diffeomorphism classes of smooth structures on X.*

Proof Let Σ be any smooth structure on X that is constructed by Theorem 4.7, 4.10, 4.12, 4.14 or Addendum 4.8, applied to X as the interior of H. Recall that Σ is produced by end-summing some smoothing Σ_a on X with some $\natural_n L_t$ for $n \in \mathbb{Z}^{>0} \cup \{\infty\}$, where L_t is an $\mathbb{R}^4$ contained in some L produced by Theorem 3.4. The smooth structure Σ_a is either a Casson smoothing corresponding to H or the standard smoothing that X inherits as a handlebody interior. In either case, X_{Σ_a} admits a smooth orientation-preserving embedding into this standard smooth structure on X. It follows from property (4) of Theorem 3.4 that $\natural_n L_t$ admits a smooth orientation-preserving embedding into $\#n\,\overline{\mathbb{C}P}^2$. Using our new hypothesis, we can now easily conclude that Σ is compactly negative-definite. Hence Σ satisfies the hypothesis of [19, Theorem 7.1]. So we obtain uncountably many diffeomorphism classes of smooth structures on X by applying that theorem to Σ. Its proof ensures that every smooth 4–manifold obtained by equipping X with one of these new smooth structures admits a

smooth embedding into X_Σ and vice versa. Both embeddings are topologically isotopic to the identity, so it is clear that each of these new smooth structures realizes the same genus-rank function, Taylor invariant, and compact equivalence class as Σ. □

Example 4.18 This example provides a construction of compact spin 4–dimensional handlebodies whose interiors are both compactly positive-definite and compactly negative-definite but do not smoothly embed into S^4, each of which has all indices at most 2 and nonzero second Betti number. Suppose that K is an amphichiral knot in $S^3 = \partial B^4$ with unknotting number and 4–ball genus both equal to 1, such as the figure-8 knot or the 6_3 knot. Then let H_K be the handlebody obtained by attaching a 0–framed 2–handle to B^4 along K. Notice immediately that H_K does not smoothly embed into S^4 because K is not smoothly slice. Our requirement on the unknotting number ensures that K bounds a smoothly immersed disk with a single double point, and we can arrange for either sign on this double point. First consider the case where the double point is positive. Resolve this singularity using $\mathbb{C}P^2$, so that K bounds a smoothly embedded disk D in $B^4 \# \mathbb{C}P^2$ whose normal framing induces the 0–framing on K. Capping off with a 4–handle produces $\mathbb{C}P^2$, and we can see H_K smoothly embedded in $\mathbb{C}P^2$ as the union of this 4–handle and a tubular neighborhood of D. Starting with a negative double point and undergoing the same procedure instead with $\overline{\mathbb{C}P}^2$ produces a smooth embedding of H_K into $\overline{\mathbb{C}P}^2$. Each of these embeddings is actually orientation-reversing, but H_K still admits a smooth orientation-preserving embedding into both $\mathbb{C}P^2$ and $\overline{\mathbb{C}P}^2$ (either by reversing the orientation on both target manifolds or by observing that H_K admits an orientation-reversing self-diffeomorphism). So the oriented open topological 4–manifold X_K obtained as the interior of the handlebody H_K inherits a smooth structure that is both compactly positive-definite and compactly negative-definite. Since $\beta_2(X_K) = 1$ and $w_2(X_K) = 0 \in H^2(X_K, \mathbb{Z}_2)$, it follows that X_K satisfies all hypotheses of both Theorem 4.7 and Addendum 4.8 (and also Theorems 4.10, 4.12 and 4.14) as the interior of H_K. Therefore, we can construct smooth structures on X_K with independent control over the resulting genus-rank functions, Taylor invariants, and compact equivalence classes. Furthermore, Theorem 4.17 finds uncountably many distinct diffeomorphism classes of smooth structures on X_K realizing any triple that occurs in this way. This procedure can clearly be generalized to more complicated knots and links with similar unknotting properties.

We conclude this section with what seems to be the biggest family of exotic $\mathbb{R}^4$'s, but note that this corollary could instead be obtained by combining previously known results about $\mathbb{R}^4$'s in the appropriate way. As in Corollary 3.5, none of these $\mathbb{R}^4$'s admit a Stein structure themselves. However, for each fixed finite value of the Taylor

invariant, all of the representatives produced by this corollary do smoothly embed into some fixed compact Stein surface. On the other hand, it is quite possible that many of the representatives with infinite Taylor invariant do not embed into any Stein surface.

Corollary 4.19 *There are uncountably many compact equivalence classes on $\mathbb{R}^4$ that each contain uncountably many diffeomorphism types, and these compact equivalence classes all realize the same arbitrarily large (finite) value of the Taylor invariant. Additionally, there are uncountably many compact equivalence classes on $\mathbb{R}^4$ with infinite Taylor invariant and at least one contains uncountably many diffeomorphism types.*

Proof The first claim follows immediately by applying Theorems 4.14 and 4.17 to $X = \mathbb{R}^4$. Next, consider L_∞ from Corollary 3.9. Since L_∞ is compactly negative-definite, [19, Theorem 7.1] finds uncountably many $\mathbb{R}^4$'s with infinite Taylor invariant in the same compact equivalence class as L_∞. To realize uncountably many compact equivalence classes with infinite Taylor invariant, choose a handlebody (which will have infinitely many 3–handles) from which L_∞ inherits its smooth structure, reverse orientation, then apply the first part of Theorem 4.14 to the result. Each resulting compact equivalence class has infinite Taylor invariant because each has a representative that contains $\overline{L_\infty}$. □

Remark 4.20 The theorems in this section could be stated in more generality. First of all, if a given homeomorphism type does not satisfy the hypotheses of some theorem above but has a sufficiently nice finite cover that does, then these methods can be adapted [19] to produce smooth structures whose diffeomorphism types are distinguishable by the invariants realized by their lifts to this cover. As above, we can independently control the values of these invariants. Secondly, following [19, Corollary 7.4], the compactly negative-definite or compactly positive-definite conditions only need to hold on a closed noncompact subset Y that has a smooth compact 3–manifold boundary. After throwing away duplicates, there are still uncountably many resulting smooth structures and they are distinguishable by the diffeomorphism types of their restrictions to Y. For example, we might construct uncountably many smooth structures that can be differentiated by the compact equivalence class of their restriction to Y.

References

[1] **S Akbulut**, **R Matveyev**, *Exotic structures and adjunction inequality*, Turkish J. Math. 21 (1997) 47–53 MR1456158

[2] **Ž Bižaca**, **J Etnyre**, *Smooth structures on collarable ends of* 4*–manifolds*, Topology 37 (1998) 461–467 MR1604866

[3] **J S Calcut**, **R E Gompf**, *On uniqueness of end-sums and* 1*–handles at infinity* In preparation

[4] **A J Casson**, *Three lectures on new infinite constructions in* 4*–dimensional manifolds*, from: "À la recherche de la topologie perdue", (L Guillou, A Marin, editors), Progr. Math. 62, Birkhäuser, Boston (1986) 201–244 MR900253

[5] **F Ding**, *Smooth structures on some open* 4*–manifolds*, Topology 36 (1997) 203–207 MR1410471

[6] **S K Donaldson**, *Connections, cohomology and the intersection forms of* 4*–manifolds*, J. Differential Geom. 24 (1986) 275–341 MR868974

[7] **F Fang**, *Smooth structures on* $\Sigma\times\mathbf{R}$, Topology Appl. 99 (1999) 123–131 MR1720366

[8] **M H Freedman**, *The topology of four-dimensional manifolds*, J. Differential Geom. 17 (1982) 357–453 MR679066

[9] **M Freedman**, **R Kirby**, *A geometric proof of Rochlin's theorem*, from: "Algebraic and geometric topology", (R J Milgram, editor), Proc. Sympos. Pure Math. XXXII Part 2, Amer. Math. Soc. (1978) 85–97 MR520525

[10] **M H Freedman**, **F Quinn**, *Topology of* 4*–manifolds*, Princeton Mathematical Series 39, Princeton Univ. Press, NJ (1990) MR1201584

[11] **M H Freedman**, **L R Taylor**, *A universal smoothing of four-space*, J. Differential Geom. 24 (1986) 69–78 MR857376

[12] **M Furuta**, *Monopole equation and the* $\frac{11}{8}$*–conjecture*, Math. Res. Lett. 8 (2001) 279–291 MR1839478

[13] **R E Gompf**, *Three exotic* $\mathbf{R}^4$ *'s and other anomalies*, J. Differential Geom. 18 (1983) 317–328 MR710057

[14] **R E Gompf**, *An infinite set of exotic* $\mathbf{R}^4$ *'s*, J. Differential Geom. 21 (1985) 283–300 MR816673

[15] **R E Gompf**, *An exotic menagerie*, J. Differential Geom. 37 (1993) 199–223 MR1198606

[16] **R E Gompf**, *Handlebody construction of Stein surfaces*, Ann. of Math. 148 (1998) 619–693 MR1668563

[17] **R E Gompf**, *Stein surfaces as open subsets of* $\mathbb{C}^2$, J. Symplectic Geom. 3 (2005) 565–587 MR2235855

[18] **R E Gompf**, *Constructing Stein manifolds after Eliashberg*, from: "New perspectives and challenges in symplectic field theory", (M Abreu, F Lalonde, L Polterovich, editors), CRM Proc. Lecture Notes 49, Amer. Math. Soc. (2009) 229–249 MR2555939

[19] **R E Gompf**, *Minimal genera of open* 4*–manifolds*, preprint (2013) `arXiv:1309.0466`

[20] **R E Gompf**, *Smooth embeddings with Stein surface images*, J. Topol. 6 (2013) 915–944 MR3145144

[21] **R E Gompf**, **T S Mrowka**, *Irreducible* 4*–manifolds need not be complex*, Ann. of Math. 138 (1993) 61–111 MR1230927

[22] **R E Gompf**, **A I Stipsicz**, 4*–manifolds and Kirby calculus*, Graduate Studies in Mathematics 20, Amer. Math. Soc. (1999) MR1707327

[23] **R C Kirby**, *The topology of* 4*–manifolds*, Lecture Notes in Mathematics 1374, Springer, Berlin (1989) MR1001966

[24] **E Laitinen**, *End homology and duality*, Forum Math. 8 (1996) 121–133 MR1366538

[25] **F Quinn**, *Ends of maps, III: Dimensions* 4 *and* 5, J. Differential Geom. 17 (1982) 503–521 MR679069

[26] **C P Rourke**, **D P Sullivan**, *On the Kervaire obstruction*, Ann. of Math. 94 (1971) 397–413 MR0305416

[27] **C H Taubes**, *Gauge theory on asymptotically periodic* 4*–manifolds*, J. Differential Geom. 25 (1987) 363–430 MR882829

[28] **L R Taylor**, *An invariant of smooth* 4*–manifolds*, Geom. Topol. 1 (1997) 71–89 MR1483766

Department of Mathematics, University of Texas at Austin
Austin, TX 78712, United States

jbennett@math.utexas.edu

Received: 25 November 2014 Revised: 20 September 2015